Actuator/control for lights and generic loads

MX5230 - MX5230C - Y4672M2L

Description

Flush mounted two-module actuator/command with 2 independent relays and neutral for "zero crossing" function" - for single or double loads.
The actuator may also be configured for the management of the connected load, whilst at the same time operating as a "control device" for the management of one or more remote actuators, with operating modes typical of 2-module basic command Y4652M2.
To be completed with 1 or 2-module covers.
In case of management of groups of lights, this device support the return state (please check the production date starting from 26W17).

Technical data

Operating temperature:	0 – 40 °C
Voltage:	110 – 230 Vac
Operating frequency:	50/60 Hz
Cable section:	2 x 1,5 m^2 or 1 x 2,5 m^2
Power supply from SCS Bus:	18 – 27 Vdc
Absorption (max. LED intensity):	9 mA (stand-by) 17 mA max (max one load) 26 mA (max two loads)

Loads	Filament lamp or halogen lamp	LED lamp (*), Fluorescent compact
230 Vac	1380 W	250 A
110 Vac	660 W	110 A

Loads	Electronic transformer	Ferromagnetic transformer
230 Vac	460 W	460 Va
110 Vac	220 W	200 Va

(*) Or max 10 lamps. For good lighting comfort, we recommend the use of lamps of the same type and from the same supplier. Compatibility with all lamps in ON/OFF mode.

Dimensional data

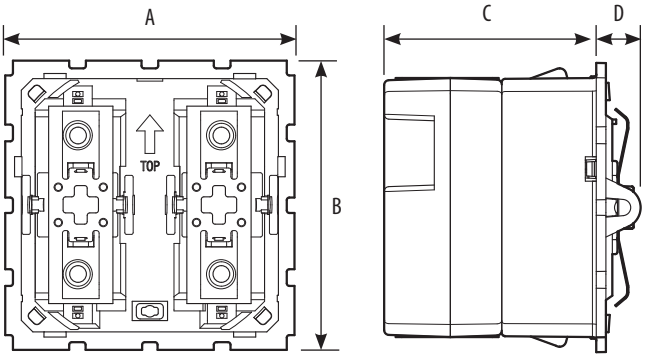

A	B	C	D
45 mm	45 mm	33 mm	6.9 mm

Control module

Front view

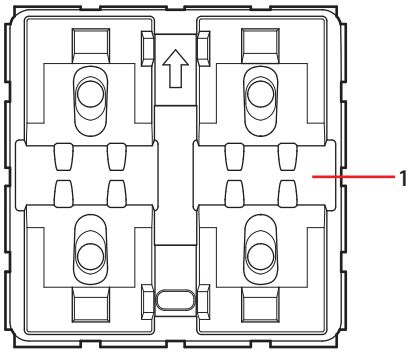

Front view without protective shell

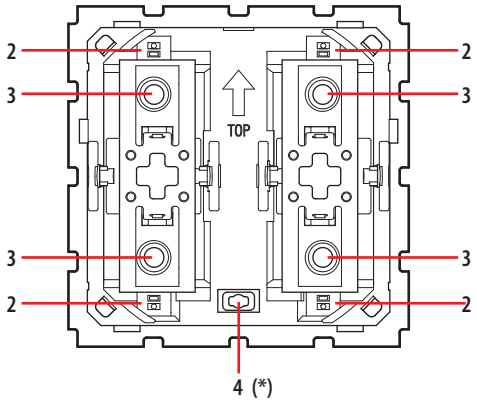

Legend

1. Protective shell
2. Status notification LED:
   Y4672M2L:
   Blue steady = load ON
   White steady = load OFF
   Blue flashing = object not configured
   MX5230/MX5230C:
   Purple steady = load ON
   Blue steady = load OFF
   Purple flashing = object not configured
3. Control pushbutton
4. LED pushbutton (*)

(*) With the device configured, by pressing the LED button it is possible to set whether the LEDs should always be on (maximum level, medium level or minimum level) or off. Starting from MEDIUM LEVEL, when the pushbutton is kept pressed, every 2 seconds the LED lights will switch from MINIMUM, to OFF, to MAXIMUM, to MEDIUM level.

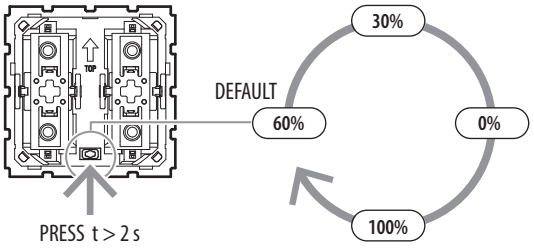

Control module

Rear view

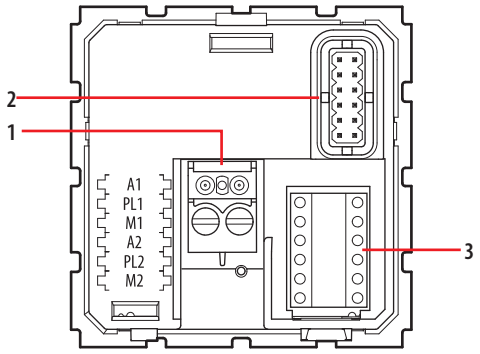

Legend

1. BUS clamp
2. Connector for connection to the actuator module
3. Configurator socket:
   A1 = actuator area
   PL1 = actuator light point
   M1 = actuator mode
   A2 = general command area
   PL2 = general command light point
   M2 = general command mode

Actuator module

Rear view

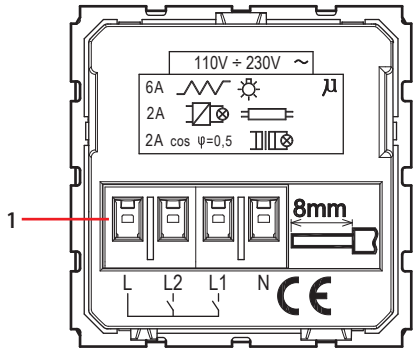

Front view

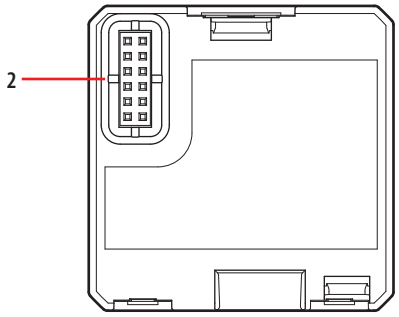

Legend

1. Load connection clamps
2. Connector for connection to the control module

List of functions

The device create the following functions:

- Lighting actuator mode (1 load)
- Lighting actuator mode (2 separate loads) with local controls
- 1 load actuator (lighting) with local control using the left button and remote actuator or scenario control using the right button
- Right key control operating mode
- Plus programmed scenario activation
- Video door entry functions
- Commands only available with virtual configuration using Home + Project App
- Use of an actuator without neutral

Configuration

For device configuration and installation and for any other information, refer to the App or documentation that can be downloaded from the on-line catalogue of the device.

Download App

Home + Control **Home + Project**

The apps can be downloaded from their respective stores.
It is recommended to update the smartphone or tablet operating systems to the latest available version.

In addition, PHYSICAL CONFIGURATION will continue to be guaranteed by inserting the configurators in the appropriate housings (*).

The configuration using Home + Project has the advantage of offering many more options when compared with the physical configuration.

For the list of modes and the corresponding meanings refer to the indications of this technical sheet and the Home + Project app.

(*) Physical configuration

1. Lighting actuator mode (1 load)

Configure A1, PL1 and M1 to define the address and mode of the local actuator, A2, PL2, M2=0.

1.1 Addressing

Address type		Configurators
Apartment	Room	A1=1 – 9
	Light point	PL1=1 – 9

1.2 Lighting

Function	Configurators	
Master actuator - cyclical ON/OFF	M1= 0	
ON with upper key, OFF with lower key	M1= 0/I	
Master actuator - cyclic ON/OFF, ignores Room and General commands	M1= PUL	
Master actuator with delayed Off command on the corresponding Slave actuator.[1)]	M1= 1	1 minute
	M1= 2	2 minutes
	M1= 3	3 minutes
	M1= 4	4 minutes

Note: only for point-to-point command. The OFF command deactivates the Master actuator; the Slave actuator is deactivated after the time set with the configurators has elapsed. Typical use in windowless bathrooms, where the ON command simultaneously activates the light (Master actuator) and the ventilation fan (Slave actuator). The subsequent OFF command switches the light off immediately and keeps the fan running for the period of time set with configurator 1 - 4 inserted in M of the Master actuator, as shown in the table.

2. Lighting actuator mode (2 separate loads) with local controls

In this mode, the actuator handles two separate loads, connected to the C - L1 and C - L2 contacts of the two relays, controlled locally with both front buttons, right (load connected in C - L2) and left (load connected in C - L1).

2.1 Addressing

Address type		Configurators
Apartment	Room	A1, A2= 1 – 9
	Light point	PL1, PL2= 1 – 9

2.2 Lighting

Function	Configurators		
Master actuator - cyclical ON/OFF	M2=0	M1=CEN	
ON with upper key, OFF with lower key	M2=0/I	M1=CEN	
The actuator as Slave. It receives a command sent by a Master actuator with the same address	M2=SLA	M1=CEN	
Master actuator - cyclic ON/OFF, ignores Room and General commands	M2=PUL	M1=CEN	
Master actuator with delayed Off command on the corresponding Slave actuator.[1)]	M2=1	M1=CEN	1 minute
	M2=2	M1=CEN	2 minutes
	M2=3	M1=CEN	3 minutes
	M2=4	M1=CEN	4 minutes

3. Load actuator (lighting) with local control using the left button and remote actuator or scenario control using the right button

3.1 Addressing

Configure A1, PL1 and M1 to define the address and mode of operation of the local actuator (controlled by the left key) as stated in sections 1.1 and 1.2.
Configure A2 and PL2 to define the address of the remote actuator to manage, as per the table below:

Address type		Configurators
Point-to-point	Room	A2= 1 – 9
	Light point	PL2= 1 – 9
Room		A2= AMB, PL2= 1 – 9
Group		A2= GR, PL2= 1 – 9
General		A2= GEN

4. Right key control operating mode

4.1 ON/OFF control:

Function		Configurators
Cyclical		M2=0
ON		M2=ON
OFF		M2=OFF
Pushbutton		M2=PUL
Timed ON	0,5 sec	M2=8
	30 sec	M2=7
	1 min	M2=1
	2 min	M2=2

4.1.1 ON/OFF control and ADJUSTMENT (Point-to-Point only):

Function	Configurators
Cyclical ON/OFF and ADJUSTMENT. ON/OFF when pressing briefly and adjustment when holding down.	M2=0
ON with upper button, OFF with lower button and DIMMER when held down	M2=0/I

4.2. Automation control

4.2.1 Addressing

Address type		Configurators
Point-to-point	Room	A1, A2=1-9
	Light point	PL1, PL2=1-9
Room		A1, A2=AMB, PL1, PL2=1-9
Group		A1, A2=GR, PL1, PL2=1-9
General		A1, A2=GEN

4.2.2 Mode

Function	Configurators
Bistable control	M1, M2=↑↓
Monostable control	M1, M2=↑↓M
Bistable control and blades control	M1, M2=6

5. Video door entry functions

5.1 Door lock release control

5.1.1 Addressing

Addressing type	Configurators
Entrance panel address	A=1-9 PL=1-9 [1)]

Note [1)]: Set the P address (two digits) of the entrance panel from which to control the door lock using the left module.
The right module controls the door lock of entrance panel P+1 if A2=PL2=M2=0.

Type of function

Function	Configurators
Door lock release control	M1, M2=3

5.2 Floor call control

5.2.1 Addressing

Define the address (two digits) of the internal unit to be called using the control device.

Addressing type	Configurators
Internal unit address	A=1-9 PL=1-9
General	A=GEN A/PL=0

Type of function:

Function	Configurators
Floor call control	M=4

5.3 Staircase lights control

5.3.1 Addressing

The device takes on the function of pushbutton for switching on the lights of the internal unit identified by its own address (two digits).

Addressing type	Configurators
Internal unit address	A=1-9 PL=1-9

Type of function:

Function	Configurators
Staircase lights control	M=5

Use of an actuator without neutral

Correct use of the product requires the connection of the neutral wire (see connection diagram). If the neutral is not connected the LEDs flash and the device will no longer perform any commands.
When the neutral cannot be brought to the product it will be used without neutral, with reduction of the outputs (see table of loads on page 1). When configuring with MyHOME_Suite the product can be configured to work without neutral.
With a physical configuration, the actuator connected without neutral does not work (flashing LED). Unblock it as follows:

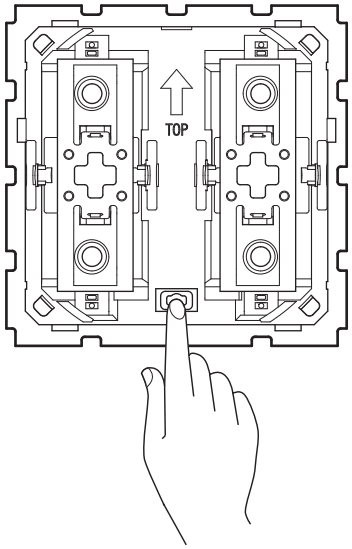

Within five minutes from switching on the product press the key indicated in the figure three times: the actuator stops flashing and unblocks.

Wiring diagrams

Wiring diagram for light connection

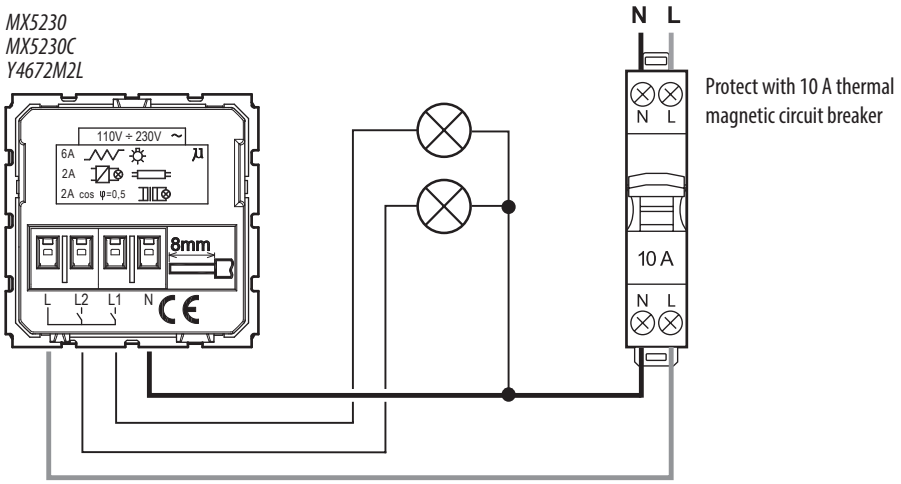

Wiring diagram for light connection without neutral

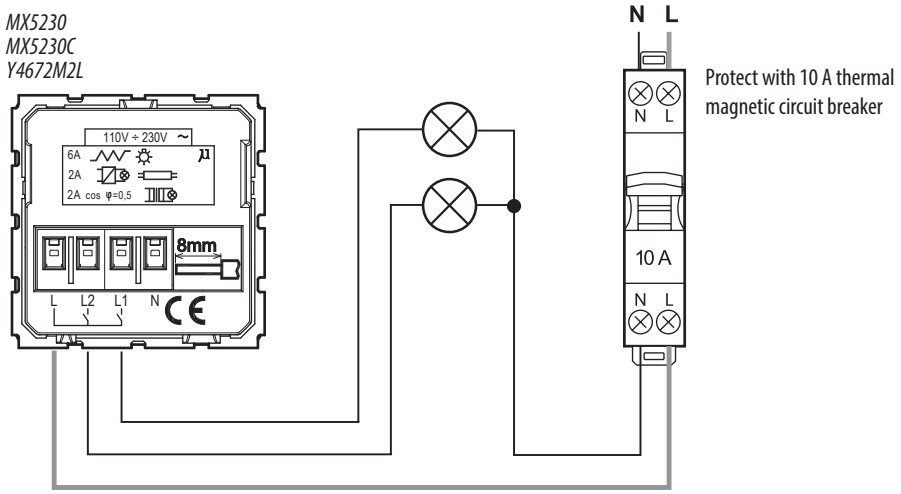

Note: for use without neutral (see the corresponding paragraph).