128, av. du Maréchal-de-Lattre-de-Tassigny - 87045 LIMOGES Cedex
Tel: 0(+33)5 55 06 87 87 - Fax: 0(+33)5 55 06 88 88
www.legrand.com

Cat 6_A STP RJ45 tooless field plug

Cat. No(s): 0 337 49

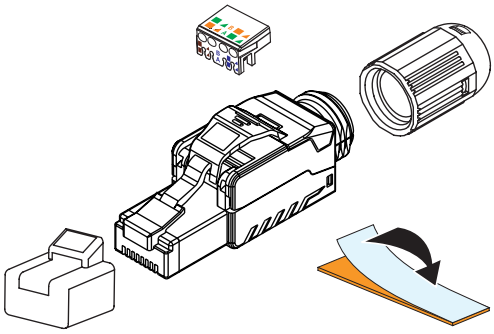

1. GENERAL CHARACTERISTICS

Cat 6_A STP RJ45 tooless field plugs for round cables
Supplied with a protection grip for the contacts.
For links cat 5e / class D, cat 6 / class E and cat 6_A / class E_A

	Solid	Stranded	ø câble	Contacts
cat6A STP	AWG 22* to AWG 26	AWG 22* to AWG 24	6 to 7,8 mm	9

* For AWG 22 use of tool recommended

Can be used in Modular Plug Terminated Link (MPTL) and Consolidation Point (CP) configurations.

2. USUAL CONNECTIONS

- Connection without RJ crimping tool
- Cabling method :

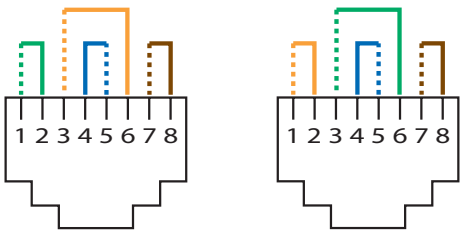

T 568A **T 568 B**

3. DIMENSIONS

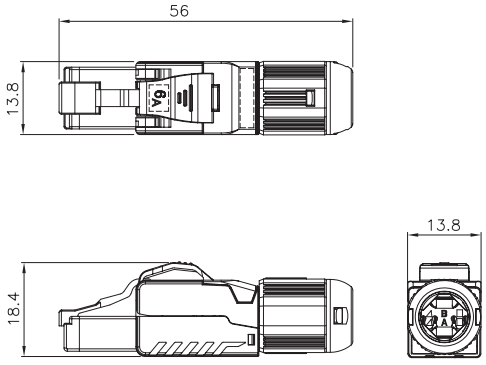

4. TECHNICAL CHARACTERISTICS

4.1 Material characteristics

Housing, cover, and boot : zinc die-casting with nickel plated.

Extractor, plug housing, IDC housing, wire management bar, boot housing : polycarbonate

Plug contacts : phosphor bronze with 100 microinch nickel plated

Plug contacts finish : mini 50 microinch gold plated on surface contact area

IDC terminal contacts : titanium copper with tin plated

Grounding contact : copper with nickel plated

4.2 Mechanical characteristics

IP20

Max. number of terminations and re-terminations: 20 times.

Endurance: 2500 movements (plug insertion/withdrawal)

4.3 Climatic characteristics

Operating temperature : -10°C to +60°C

5. STANDARDS ANS APPROVALS

ISO/IEC 11801 series : International standard for generic cabling for customer premises

ANSI/TIA 568 series : North American standard for generic cabling for customer premises

EN 50173 series : European standard for generic cabling for customer premises

IEC 60603-7 series : International standard for connector specifications

Connectors are compliant to requirements for the following remote powering applications

IEEE 802.3af , IEEE 802.3at , IEEE 802.3bt : “Power over Ethernet”, Types 1 to 4, up to 90w.

The connectors are compliant NF C90 483.