Up/Sleep wireless switch
CB0412 - CN0412 - CT0412

This product is a smart accessory **requiring** to install a starter pack or a gateway «… with Netatmo»

Pack contents

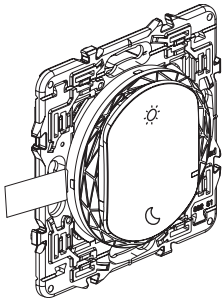

x1
Up/Sleep wireless switch

Wireless lighting switch

Frequency bands: 2.4 - 2.4835 GHz; Power level: < 100 mW

Download the **Home + Control** app and follow the instructions to associate your product

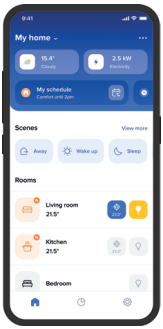

Download on the App Store

GET IT ON Google Play

You are now ready to control your installation and can customize your scenarios via the **Home + Control** app or your voice assistant.

works with Google Home

works with alexa

Works with Apple Home

Attach the wireless switches

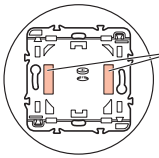

Put the stickers in place.

Before you attach the wireless switch(es) with the removable stickers provided, test one on a non-visible part of the wall.

LE17064AA

Replacing the battery

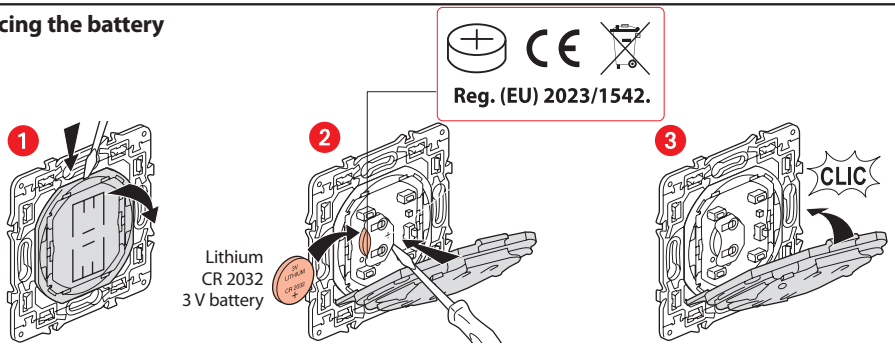

Reset process

The reset is done by pressing the «Setup» button for about 7 seconds, accessible by removing the cover. The reset is confirmed by a red flash.

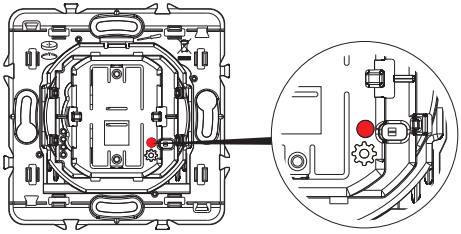

⚠ Safety instructions

This product should be installed in compliance with installation rules, preferably by a qualified electrician. Incorrect installation and/or incorrect use can lead to risk of electric shock or fire. Before carrying out the installation, read the instructions and take account of the product's specific mounting location. Do not open up, dismantle, alter or modify the device except where specifically required to do so by the instructions. All **Legrand** products must be opened and repaired exclusively by personnel trained and approved by **Legrand**. Any unauthorised opening or repair completely cancels all liabilities and the rights to replacement and guarantees. Use only **Legrand** brand accessories.

PDF

www.legrand.com
LEGRAND - Pro and Consumer Service - BP 30076
87002 LIMOGES CEDEX FRANCE • www.legrand.com

SIMPLIFIED **EU** DECLARATION OF CONFORMITY

The undersigned, **Legrand**
declares that the radio-electric equipment referred to in these instructions complies with directive 2014/53/EU. The full text of the EU declaration of conformity is available on the following website:
www.legrand.com/ecatalogue

iOS : To control this Apple Home enabled accessory the latest version of iOS or iPadOS is recommended. Apple : App Store is a service mark of Apple Inc. registered in the U.S. and other countries. IOS is a trademark or registered trademark of Cisco in the U.S. and other countries and is used under license. Apple Home : Apple Home and iPadOS are trademarks of Apple Inc. registered in the U.S. and other countries. Apple Home is a trademark of Apple Inc.
Google Play : A recent version of Android with access to Google Play is recommended.
Amazon : Amazon Alexa and all related logos are trademarks of Amazon.com Inc. or its affiliates.
Android : Android Google Play and the Google Play logo are trademarks of Google LLC.