**Double wireless and batteryless lighting control**
**AA5207MT - AA5207MB - AA5207MW**
**AC5207MT - AC5207MB - AC5207MW**

legrand®

Requires to install the connected starter pack and one or more «... with Netatmo» connected switch, micromodule or socket outlet.

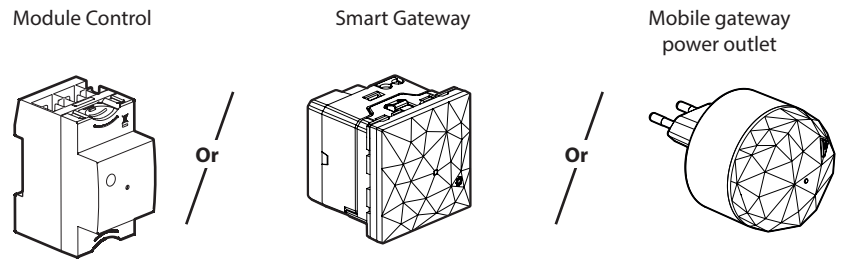


**Pack contents:**

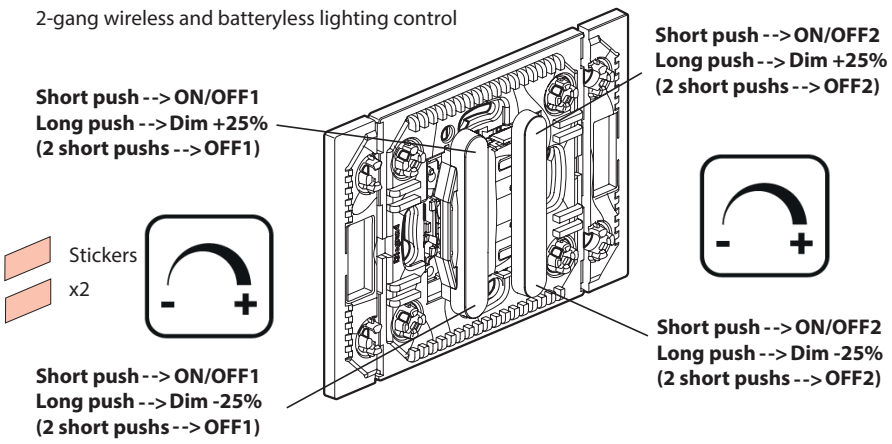


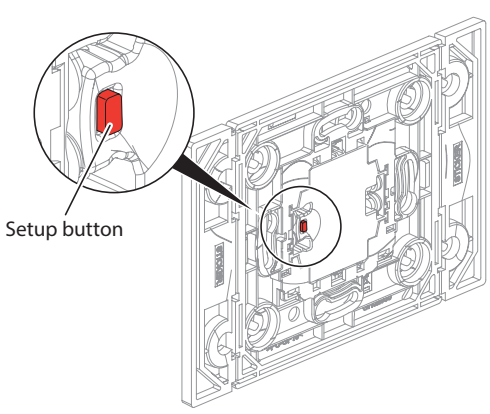


Frequency bands: 2.4 - 2.4835 GHz
Power level: < 20 mW

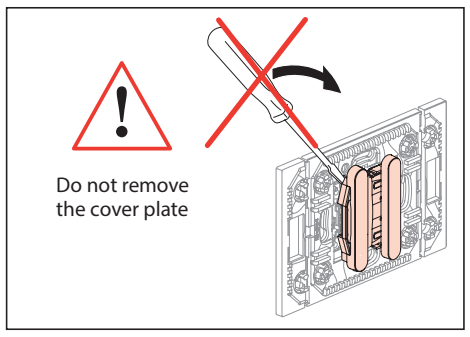


LE15308AA-EN

① **Start the configuration**

Press the configuration button of gateways until its light briefly turns green, and then stop pressing.
All wired products lights will turn green.

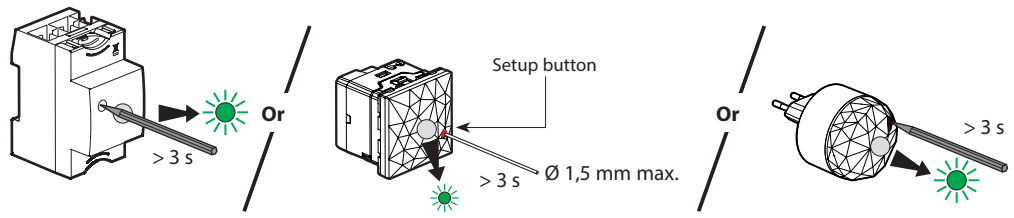


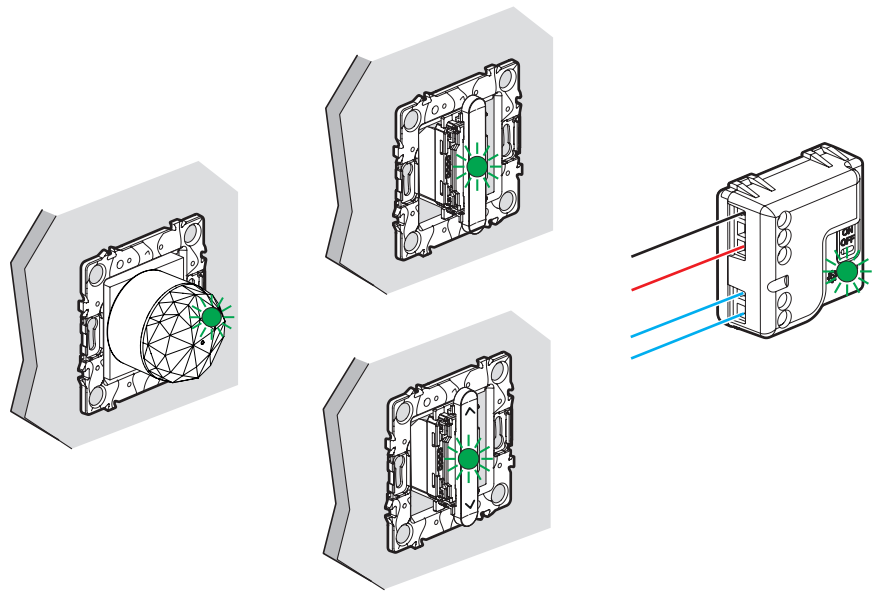

② **Pair the wireless, batteryless switch to control the connected products (switch, micromodule, socket-outlet, latching relay).**

⚠ Make sure that the indicator lights on the wired products are green and not flashing. If not, go back to precedent step ①.



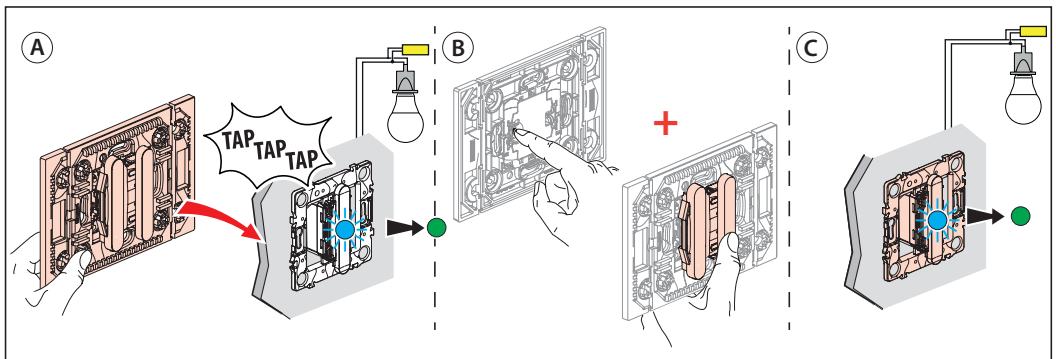


(A) Tap 3 times the product to be controlled with the wireless, batteryless control. The light of the product to control flashes rapidly.

(B) While holding the "setup" button on the wireless, batteryless control, briefly press the "ON" or "OFF" button on the wireless batteryless control.

(C) The indicator light of the product to control will briefly turn blue, and then will turn green again.The pairing was successful.

**Check the correct pairing by pressing ON/OFF buttons**

**Multiple pairing:** You can control several switches with the same wireless, batteryless switch by repeating the operation for each product that you want to control.

③ **Complete the installation**

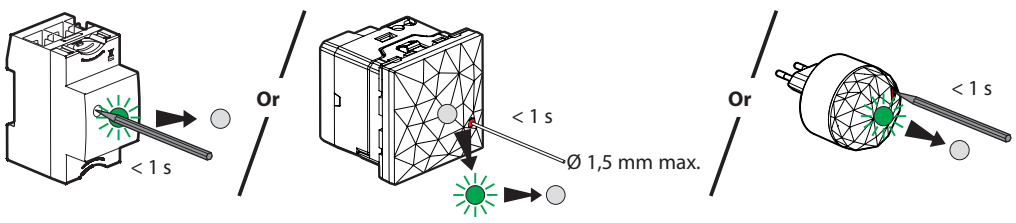


To complete your installation, **briefly** press the configuration button of the **gateways.**
**All the indicator lights on the products switch off**

**If necessary, erase the configuration of the wireless batteryless control (factory reset)**

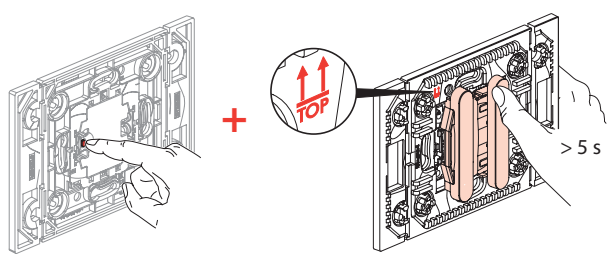


While holding the "setup" button on the wireless, batteryless control, press the upper button for 5 seconds.
**Confirm that your control is correctly reset by making an "ON" command, then "OFF".**



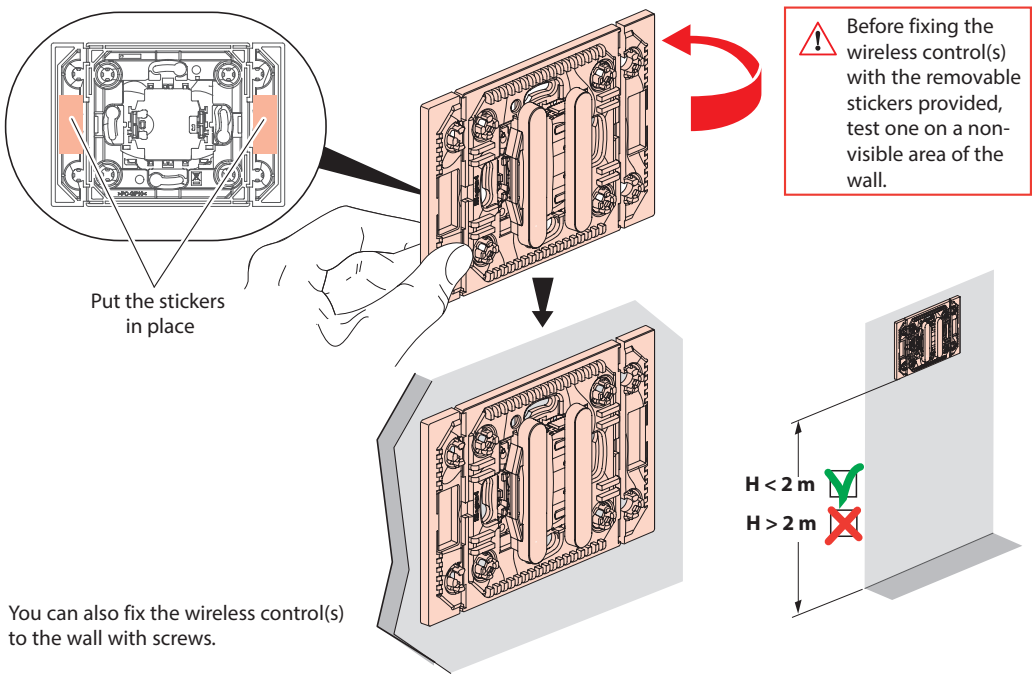


⚠ Before fixing the wireless control(s) with the removable stickers provided, test one on a non-visible area of the wall.

You can also fix the wireless control(s) to the wall with screws.

PDF

**www.legrand.com/ecatalogue**
LEGRAND - Pro and Consumer Service - BP 30076
87002 LIMOGES CEDEX FRANCE • www.legrand.com

The undersigned, Legrand declares that the radio-electric equipment type (AA5207MT - AC5207MT - AA5207MB - AC5207MB - AA5207MW - AC5207MW) complies with directive 2014/53/EU.
The full text of the EU declaration of conformity is available on the following website: **www.legrand.com/ecatalogue**

**Download the app**
Your installation is ready. You can download the **Legrand Home + Control** application to control your lights remotely.

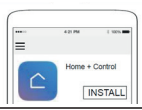


Télécharger dans l'App Store
DISPONIBLE SUR Google Play

FC

FCC ID: 2ACN8-ZLGP1X IC: 12132A-ZLGP1X Model : ZLGP18

This device contains licence-exempt transmitter(s)/receiver(s) that comply with FCC RF and Innovation, Science and Economic Development Canada's licence-exempt RSS(s). Operation is subject to the following two conditions: (1) this device may not cause interference, and (2) This device must accept any interference, including interference that may cause undesired operation of the device.
This device complies with FCC and ISED radiation exposure limits set forth for general population. This device must not be co-located or operating in conjunction with any other antenna or transmitter.
FCC Caution: the user that changes or modifications not expressly approved by the party responsible for compliance could void the user's authority to operate the equipment.

FCC NOTE: This equipment has been tested and found to comply with the limits for a Class B digital device, pursuant to part 15 of the FCC Rules. These limits are designed to provide reasonable protection against harmful interference in a residential installation. This equipment generates, uses and can radiate radio frequency energy and, if not installed and used in accordance with the instruction, may cause harmful interference to radio communications. However, there is no guarantee that interference will not occur in a particular installation. If this equipment does cause harmful interference to radio or television reception which can be determined by turning the equipment off and on, the user is encouraged to try to correct interference by one or more of the following measures:
- Reorient or relocate the receiving antenna.
- Increase the separation between the equipment and receiver.
- Connect the equipment into an outlet on circuit different from that to which the receiver is connected.
- Consult the dealer or an experienced radio/TV technician for help.

⚠ **Safety instructions** GB IE
Make sure the power supply is disconnected before any intervention.
Strictly comply with instructions for installation and use.

green power
certified by connectivity standards alliance
**Model: ZLGP18**

legrand®

**تحكم مزدوج في الإضاءة لاسلكيًا/ بدون بطارية**
**AA5207MT - AA5207MB - AA5207MW**
**AC5207MT - AC5207MB - AC5207MW**

يستلزم تركيب مجموعة بادئ التشغيل الموصلة ومفتاح موصل من طراز "with Netatmo ..."، أو وحدة صغيرة، أو مقبس واحد أو أكثر.

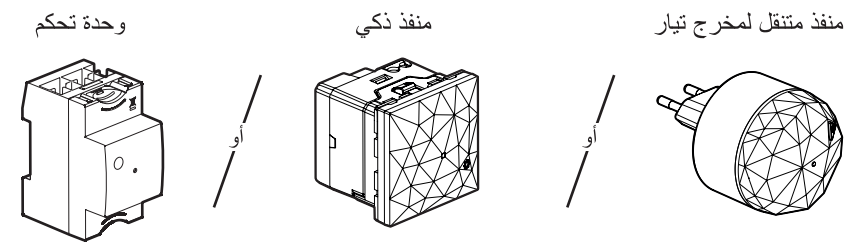


**محتويات العبوة :**

تحكم مزدوج في الإضاءة لاسلكيًا/ بدون بطارية

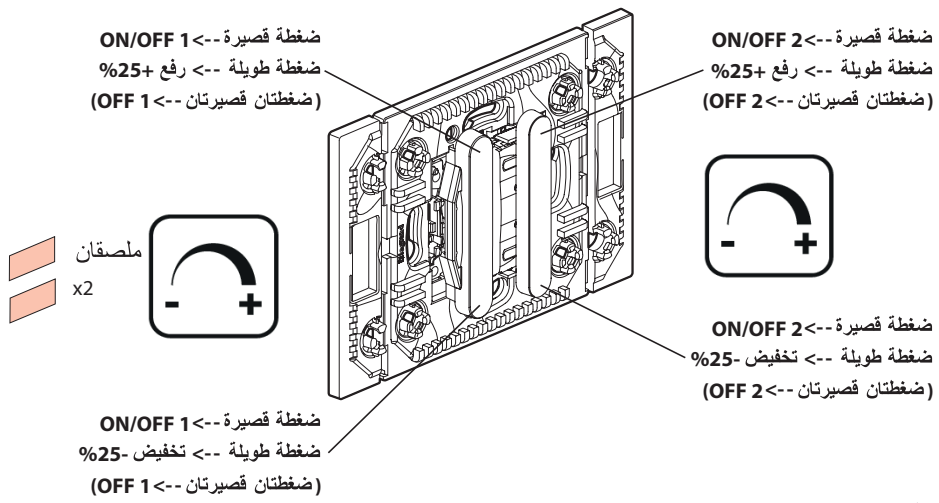


نطاقات التردد: 2.4 - 2.4835 جيجاهرتز
مستوى الطاقة: < 20 ملي واط

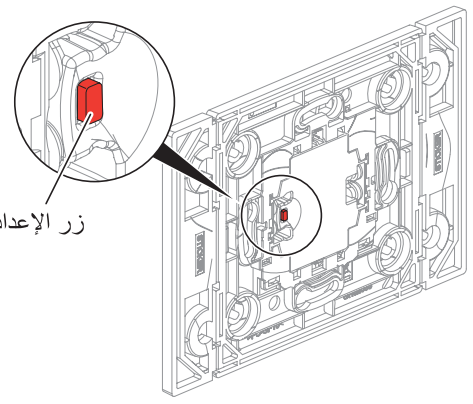


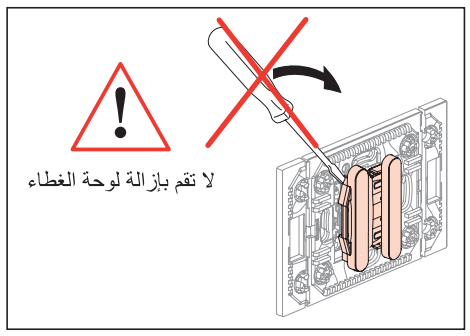


LE15308AA-AR

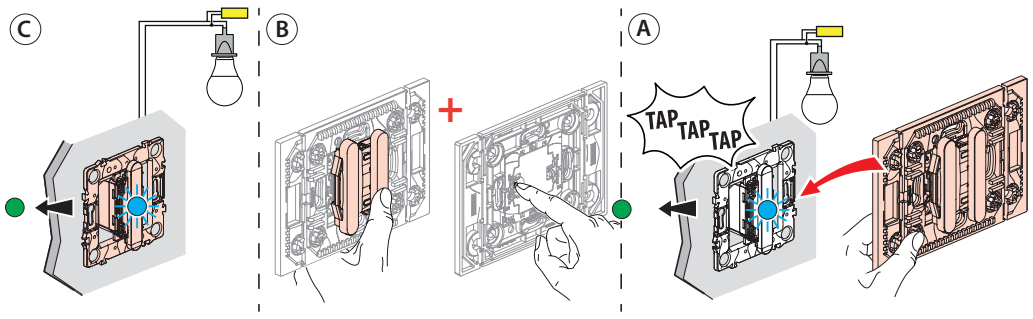


(A) اضغط 3 مرات على المنتج المراد التحكم فيه باستخدام مفتاح التحكم اللاسلكي بدون بطارية. يومض مصباح المنتج المراد التحكم فيه وميضًا سريعًا.

(B) أثناء الضغط مع الاستمرار على زر "الإعداد" بمفتاح التحكم اللاسلكي بدون بطارية، اضغط لفترة وجيزة على زر "ON" أو "OFF" بمفتاح التحكم اللاسلكي بدون بطارية.

(C) يتحول المصباح المؤشر بالمنتج المراد التحكم فيه إلى اللون الأزرق لفترة وجيزة ثم إلى اللون الأخضر مجددًا. يعني ذلك إتمام عملية الإقران بنجاح.

**تحقق من صحة عملية الإقران بواسطة الضغط على زري ON/OFF**

**الإقران المتعدد:** يمكنك التحكم في مفاتيح متعددة باستخدام نفس المفتاح اللاسلكي بدون بطارية وذلك عن طريق تكرار العملية لكل منتج تريد التحكم فيه.

③ **إكمال التركيب**

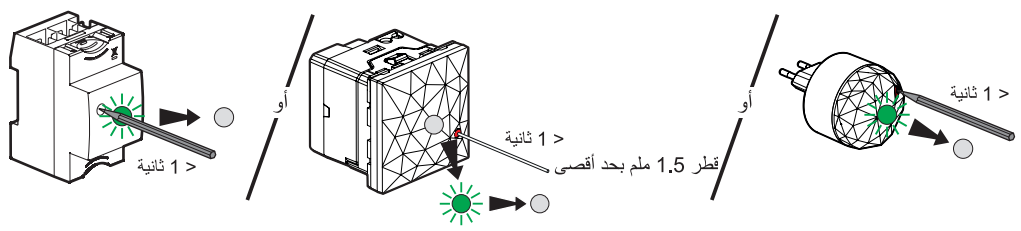


لإكمال عملية التركيب، **اضغط لفترة وجيزة** على زر التكوين **بالمنافذ.**
**تنطفئ كل المصابيح المؤشرة بالمنتجات**

**مسح تكوين مفتاح التحكم اللاسلكي بدون بطارية (إعادة الضبط على إعدادات المصنع) عند الضرورة**

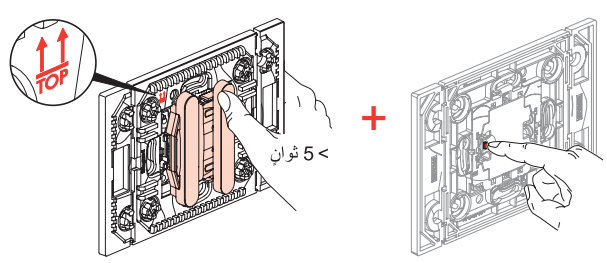


أثناء الضغط مع الاستمرار على زر "الإعداد" بمفتاح التحكم اللاسلكي بدون بطارية، اضغط على الزر العلوي لمدة 5 ثوانٍ.
**تأكد من إعادة ضبط مفتاح التحكم لديك بشكل صحيح عن طريق إصدار أمر ON ثم أمر OFF**



① **بدء التكوين**

اضغط على زر التكوين بالمنافذ حتى يتحول المصباح الموجود على الزر إلى اللون الأخضر لفترة وجيزة ثم توقف عن الضغط.
تتحول كل مصابيح المنتجات الموصلة إلى اللون الأخضر.

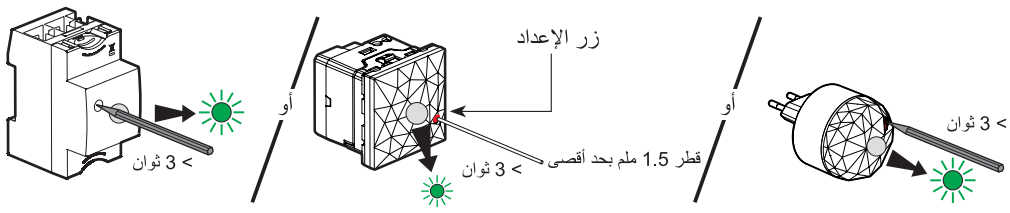


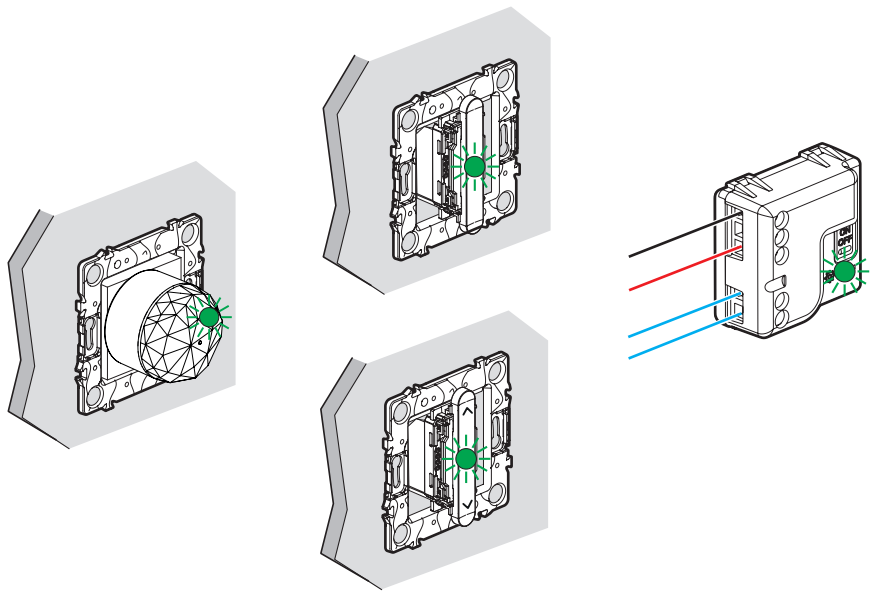

② **إقران المفتاح اللاسلكي بدون بطارية للتحكم في المنتجات الموصلة (المفتاح، أو الوحدة الصغيرة، أو المقبس، أو المرحل ذو الدائرة القلابة).**

⚠ تأكد أن المصابيح المؤشرة بالمنتجات الموصلة مضاءة باللون الأخضر وغير وامضة. إذا لم تكن كذلك، فعُد إلى الخطوة السابقة ①.



⚠ قبل تثبيت مفاتيح التحكم اللاسلكية بصحبة الملصقات المتوفرة القابلة للإزالة، جرّب واحدًا على مساحة غير ظاهرة من الحائط.

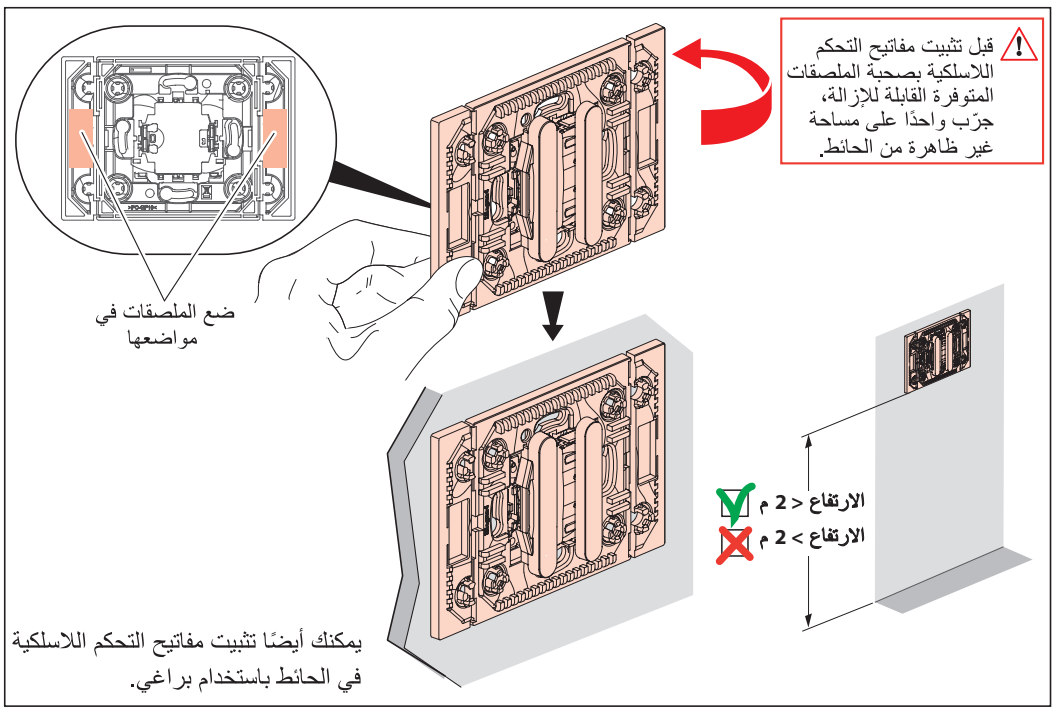


يمكنك أيضًا تثبيت مفاتيح التحكم اللاسلكية في الحائط باستخدام براغي.

تعلن شركة Legrand أن نوع الجهاز اللاسلكي الكهربائي (AA5207MW - AC5207MW - AA5207MT - AC5207MT - AA5207MB - AC5207MB) متوافق مع التوجيه 2014/53/EU.
النص الكامل لإعلان المطابقة الخاص بالاتحاد الأوروبي متوفر على موقع الويب التالي:
**www.legrand.com/ecatalogue**

PDF
**www.legrand.com/ecatalogue**
LEGRAND - خدمة المتخصصين والمستهلكين - BP 30076
www.legrand.com + FRANCE CEDEX LIMOGES 87002

**قم بتنزيل التطبيق**
التركيب الخاص بك جاهز. يمكنك تنزيل تطبيق **Legrand Home + Control** للتحكم في أنظمة الإضاءة لديك عن بُعد.

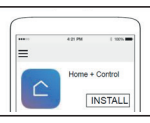


Télécharger dans l'App Store
DISPONIBLE SUR Google Play

FCC ID: 2ACN8-ZLGP1X IC: 12132A-ZLGP1X Model : ZLGP18

This device contains licence-exempt transmitter(s)/receiver(s) that comply with FCC RF and Innovation, Science and Economic Development Canada's licence-exempt RSS(s). Operation is subject to the following two conditions: (1) this device may not cause interference, and (2) This device must accept any interference, including interference that may cause undesired operation of the device.
This device complies with FCC and ISED radiation exposure limits set forth for general population. This device must not be co-located or operating in conjunction with any other antenna or transmitter.
FCC Caution: the user that changes or modifications not expressly approved by the party responsible for compliance could void the user's authority to operate the equipment.

FCC NOTE: This equipment has been tested and found to comply with the limits for a Class B digital device, pursuant to part 15 of the FCC Rules. These limits are designed to provide reasonable protection against harmful interference in a residential installation. This equipment generates, uses and can radiate radio frequency energy and, if not installed and used in accordance with the instruction, may cause harmful interference to radio communications. However, there is no guarantee that interference will not occur in a particular installation. If this equipment does cause harmful interference to radio or television reception which can be determined by turning the equipment off and on, the user is encouraged to try to correct interference by one or more of the following measures:
- Reorient or relocate the receiving antenna.
- Increase the separation between the equipment and receiver.
- Connect the equipment into an outlet on circuit different from that to which the receiver is connected.
- Consult the dealer or an experienced radio/TV technician for help.

⚠ **إرشادات السلامة**
تأكد من فصل مصدر إمداد التيار قبل أي إجراء.
التزم تمامًا بإرشادات التركيب والاستخدام.

green power
certified by connectivity standards alliance
**Model: ZLGP18**