legrand®

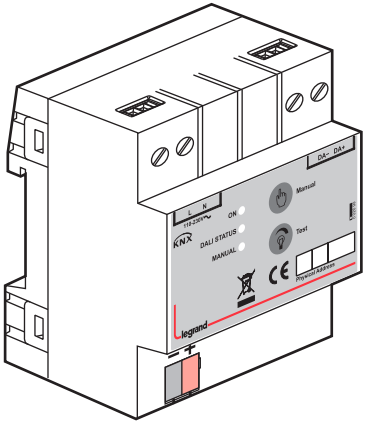

V	29V⎓
KNX - +	4 x (Ø 0,6 < ⎓ < Ø 0,8) 8 mm
x =	x = 4
	- 5°C → + 45°C

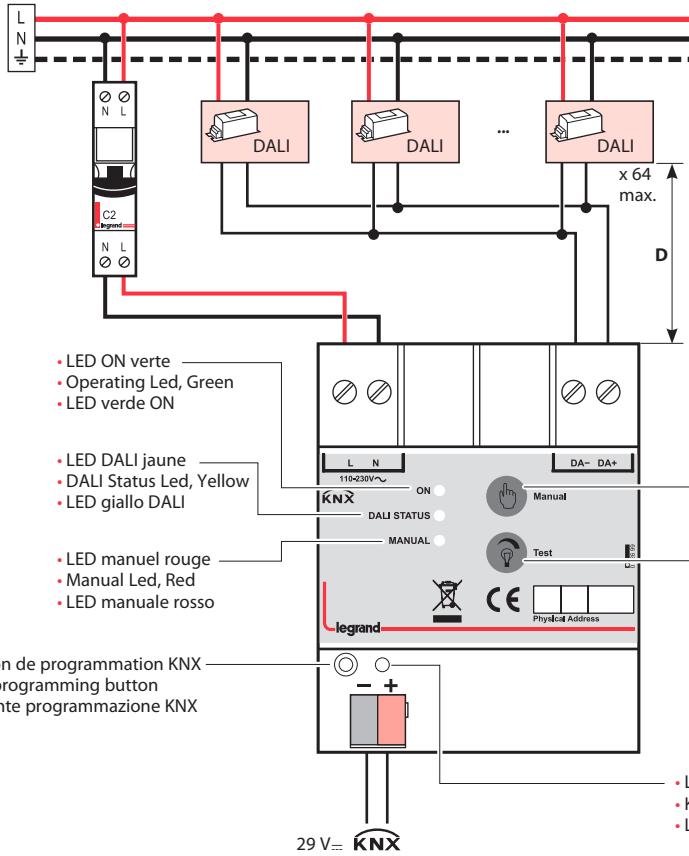

D	
≤ 100 m	0,5 mm²
≤ 150 m	0,75 mm²
≤ 300 m	1,5 mm²

- LED ON verte
- Operating Led, Green
- LED verde ON

- LED DALI jaune
- DALI Status Led, Yellow
- LED giallo DALI

- LED manuel rouge
- Manual Led, Red
- LED manuale rosso

- Bouton manuel
- Manual Button
- Pulsante manual

- Bouton test
- Test Button
- Pulsante test

- Bouton de programmation KNX
- KNX programming button
- Pulsante programmazione KNX

- LED de programmation KNX
- KNX programming led
- LED di programmazione KNX

LE12363AA