H4652
LN4652
067592
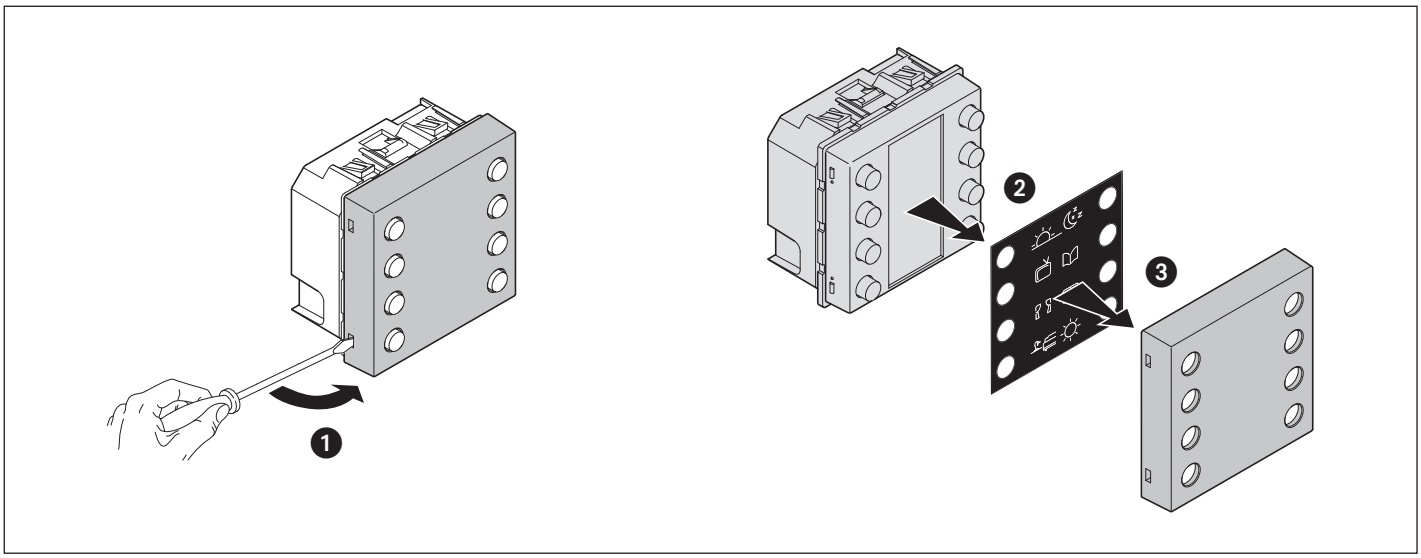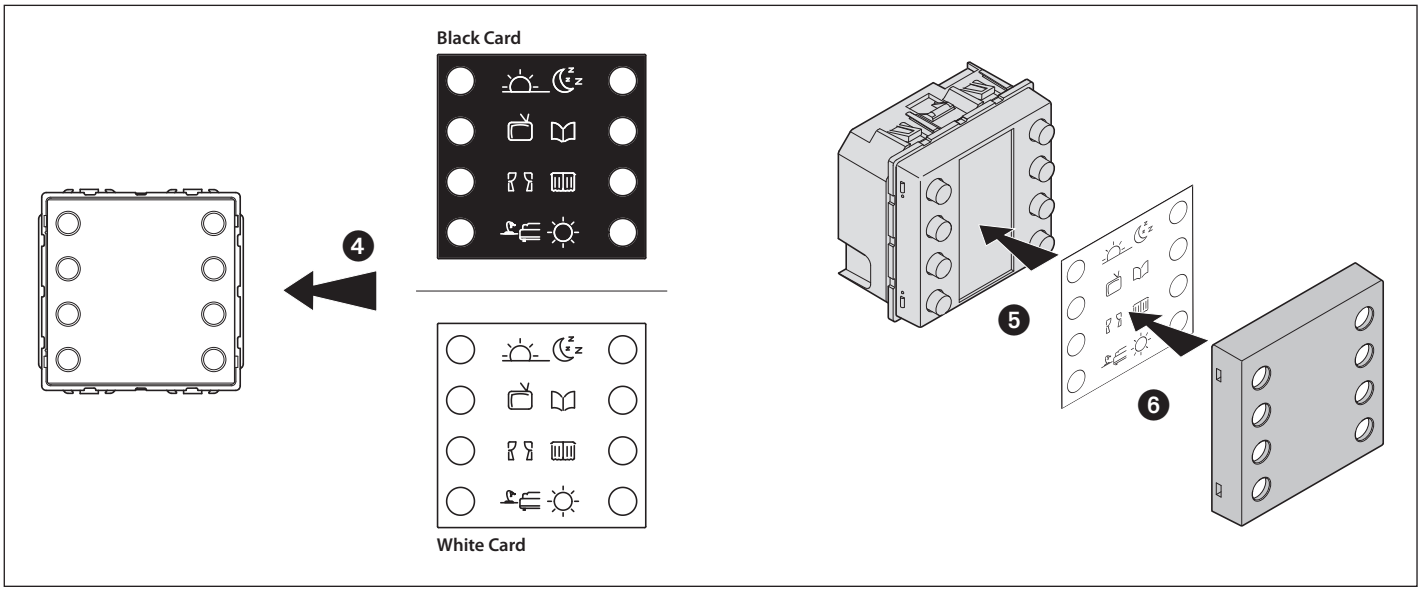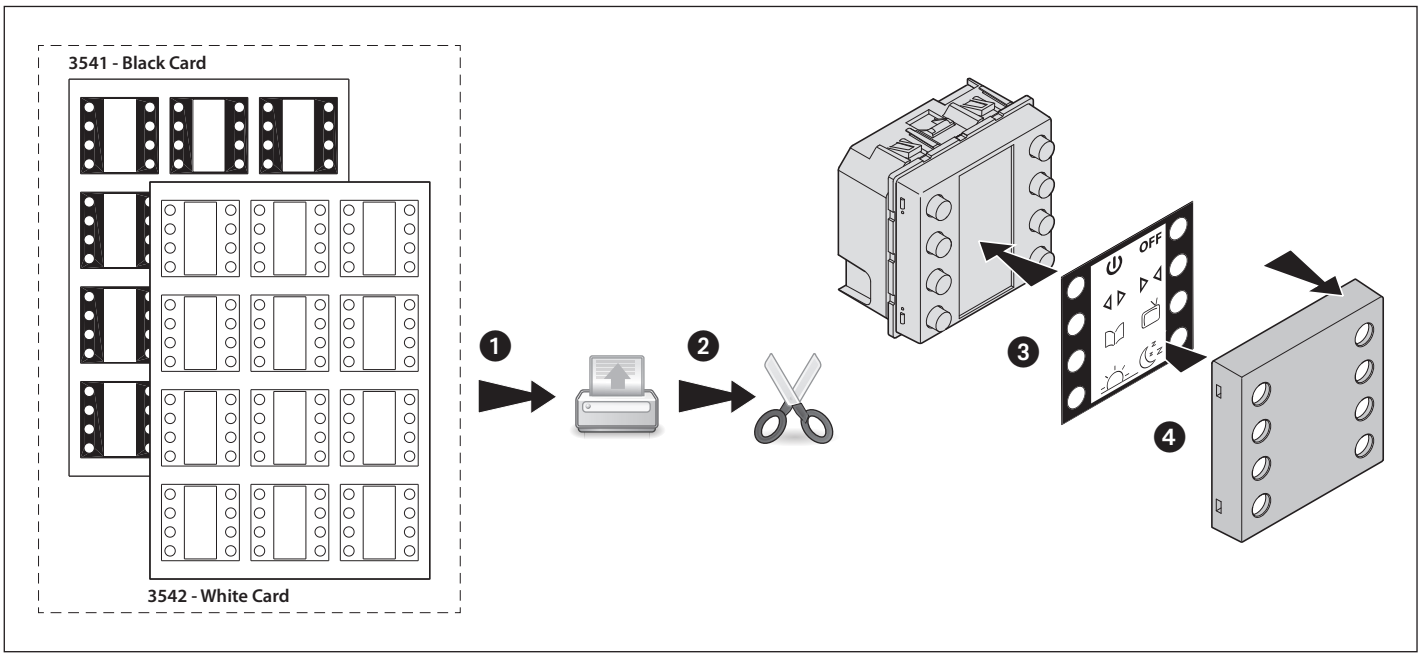
LE06019AA-02PC-13W21