ZUCCHINI

51511151..
51521151..

MS

Ⓐ

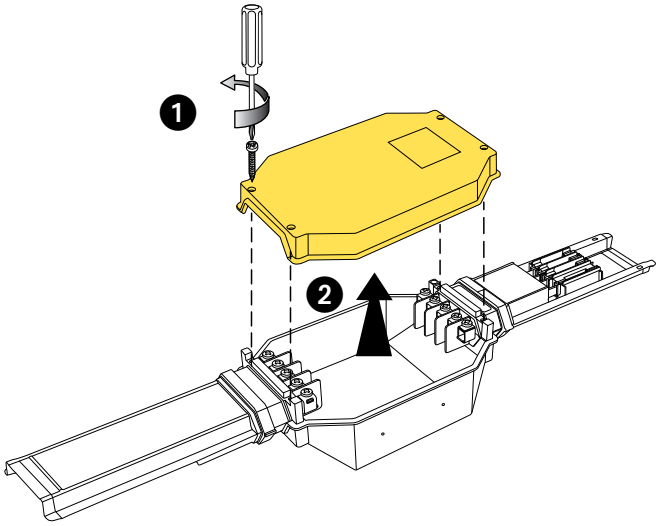

Ⓑ

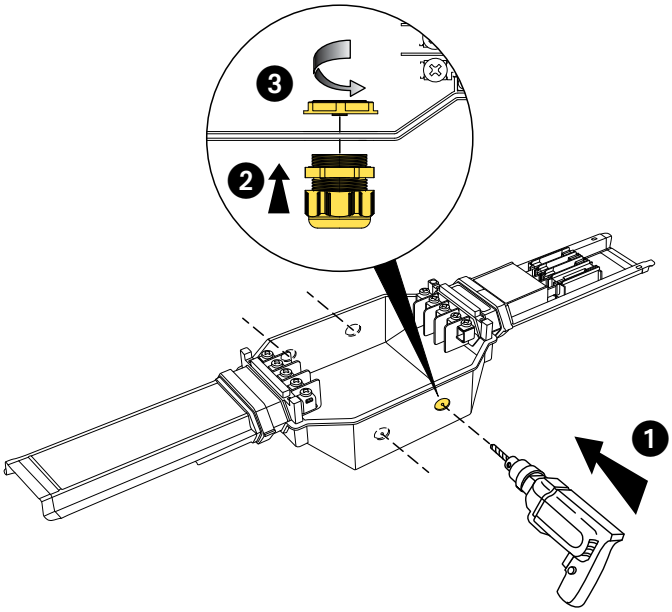

Ⓒ

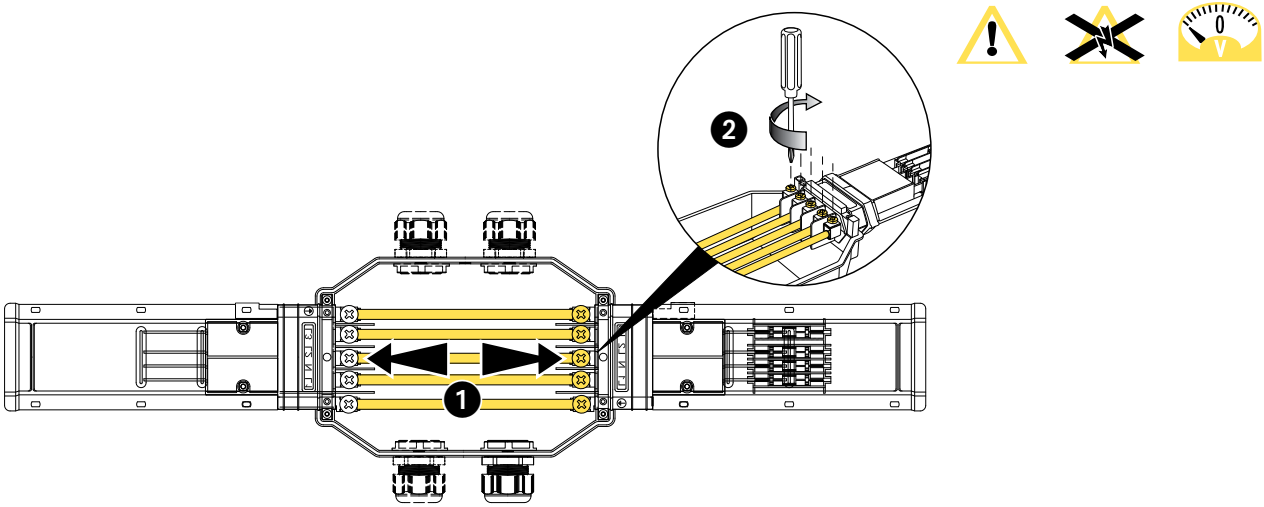

Ⓓ

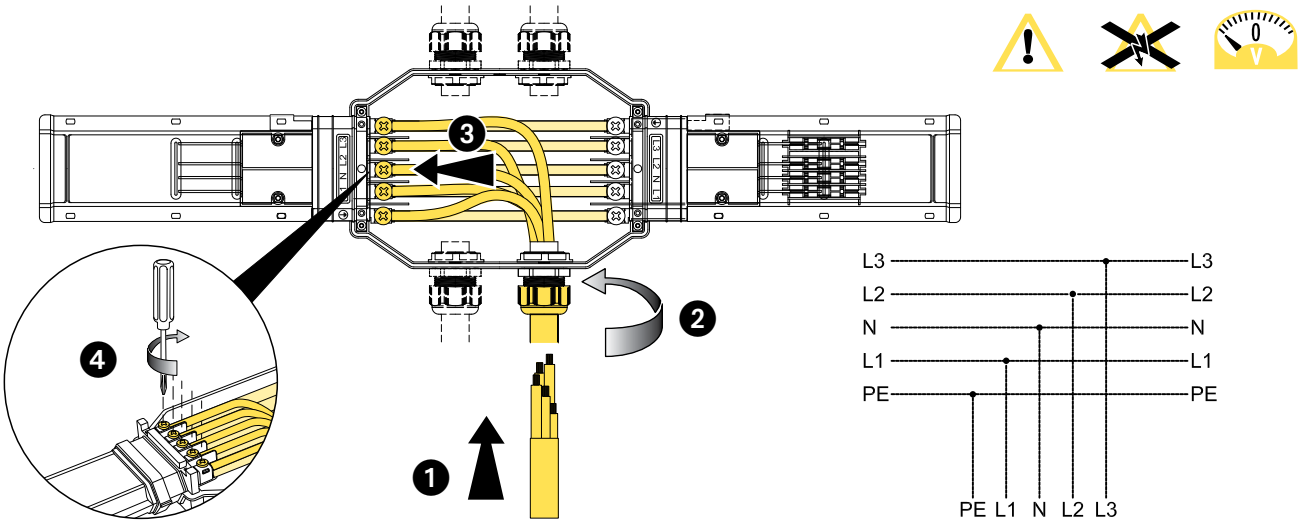

LE05161AA

09/12-01 WP

Ⓔ

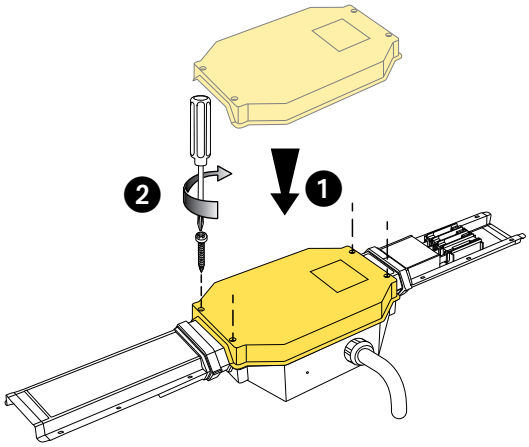
2
1

Ⓕ

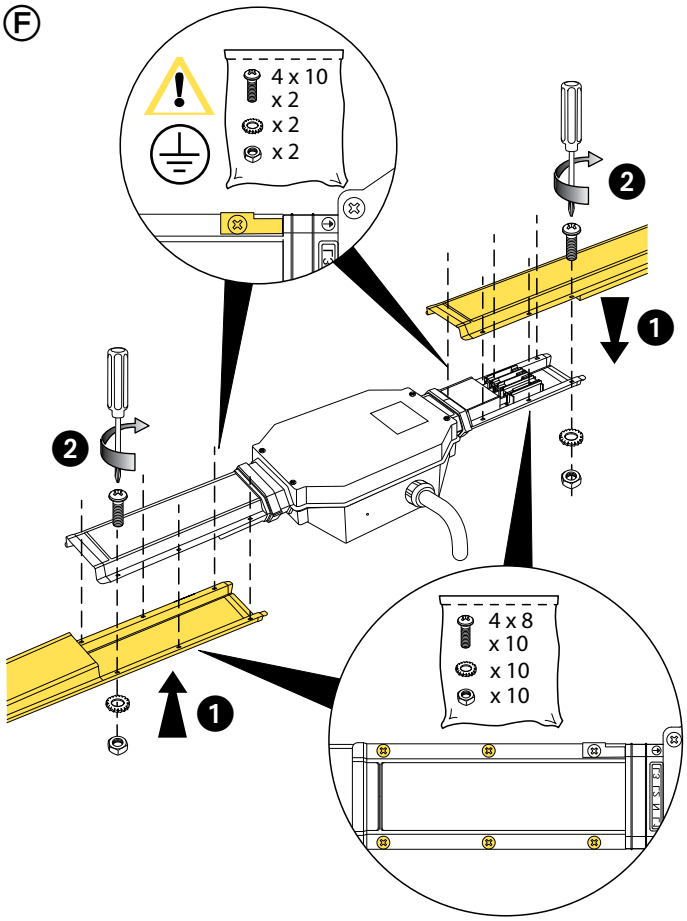
4 x 10
x 2
x 2
x 2
2
1
2
1
4 x 8
x 10
x 10
x 10

Ⓖ

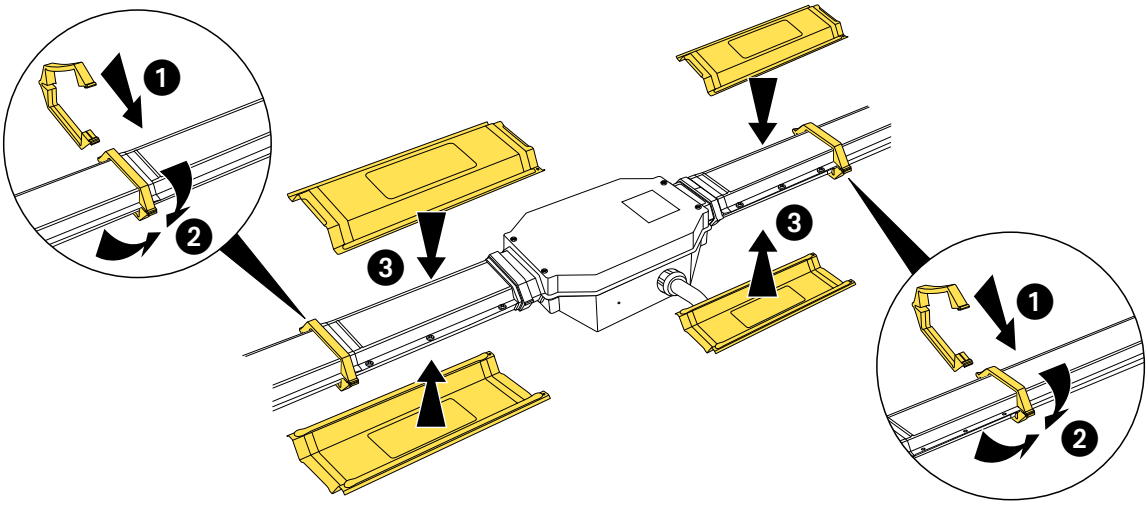
1
2
3
3
1
2

Ⓗ

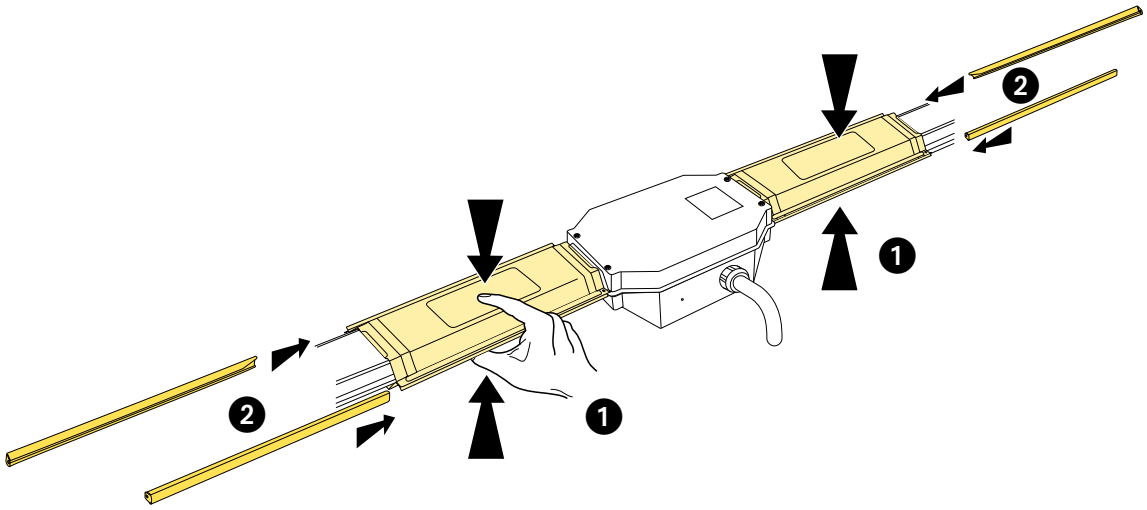
2
1
2
1