legrand® CABLE MANAGEMENT

21500 MONTBARD
Phone : 03.80.89.58.15 - Fax : 03.80.92.09.67

REHAUSSE R25
R25 STAND OFF BRACKET

Reference(s) : 586 640/44/47

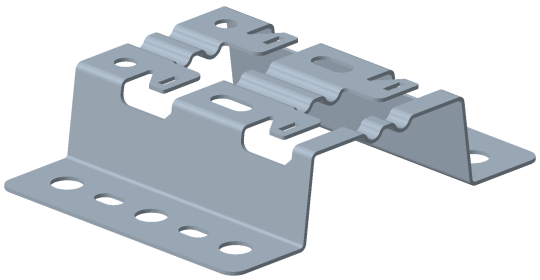

1. RANGE

Designation	Code	Poids* / *Weight** (Kg)	*(lb)*	Epaisseur / *Thickness* (mm)	*(inch)*	Matière / *Material*	Norme / *Standard*	Finition / *Coating*	Classe de résistance contre la corrosion/ *Class for resistance against corrosion*
R25 GS	586 640	0.126	*0.278*	1.2	*0.05"*	DX 51 D Z275 MAC	EN 10346	GS / *PG*	Class 3 / IEC 61537
R25 ZnMg	586 647	0.126	*0.278*	1.2	*0.05"*	DX 51 D ZM140-310 MAC	EN 10346	ZnMg	Class 8 / IEC 61537
R25 SS316L	586 644	0.129	*0.285*	1.2	*0.05"*	X2 Cr Ni Mo 17-12-2	EN 10088-2	INOX316L / *SS316L*	Class 9D / IEC 61537

2. DIMENSIONS (mm/*inch*)

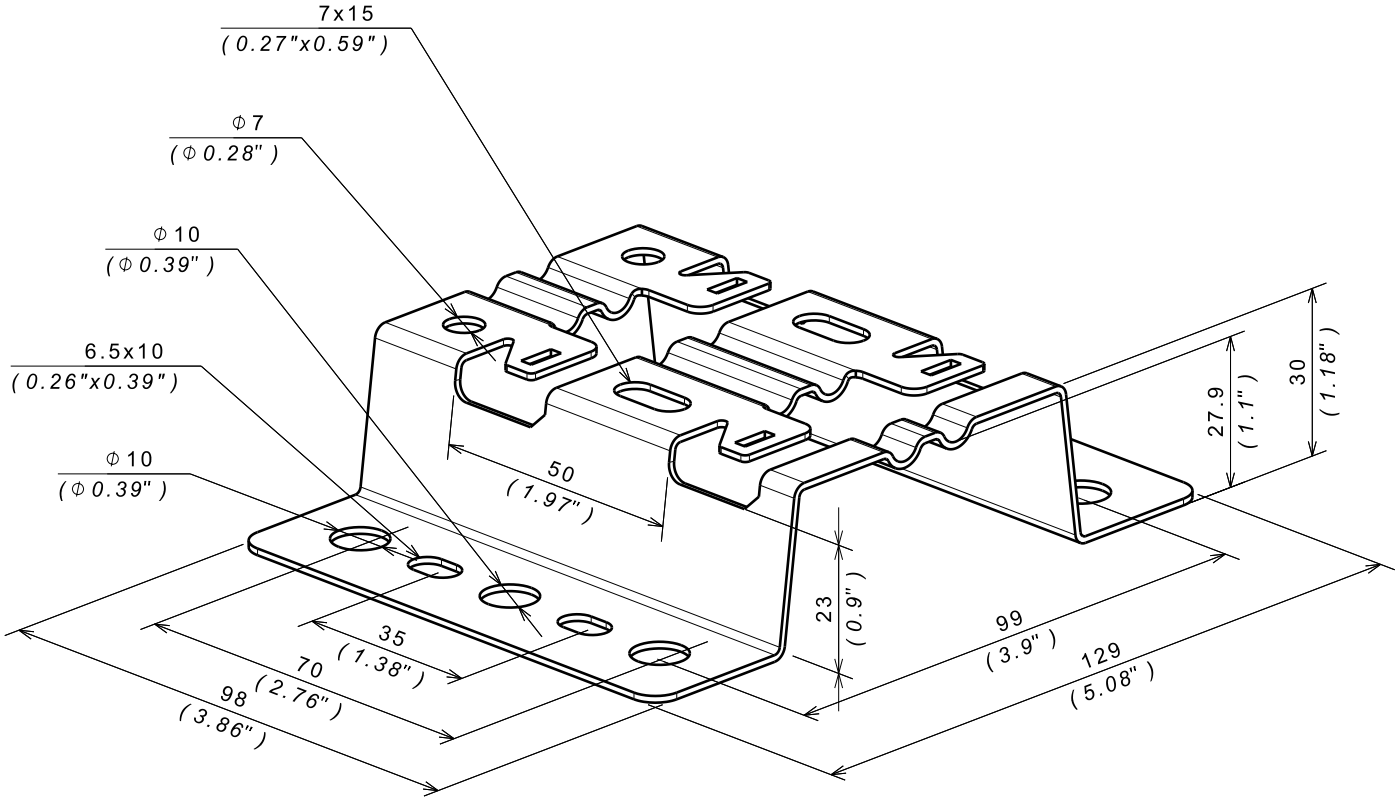

legrand CABLE MANAGEMENT

21500 MONTBARD
Phone : 03.80.89.58.15 - Fax : 03.80.92.09.67

REHAUSSE R25
R25 STAND OFF BRACKET

Reference(s) : 586 640/44/47
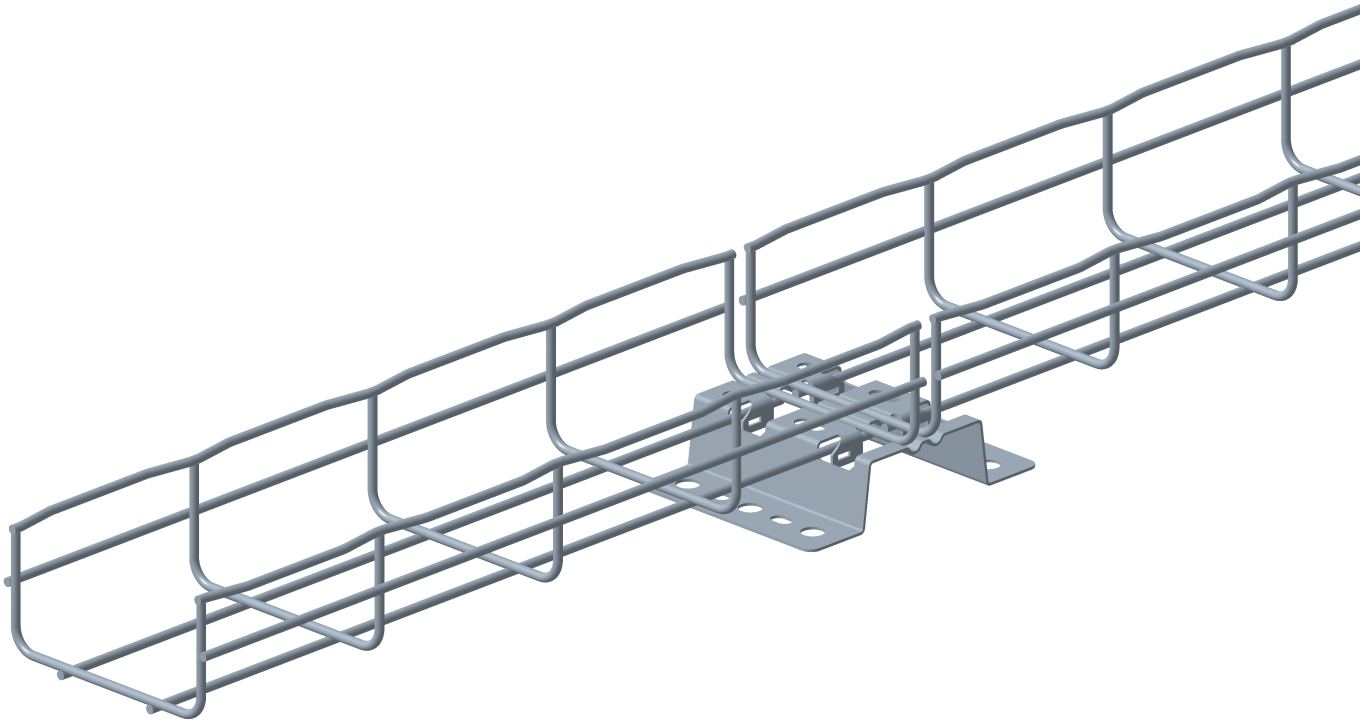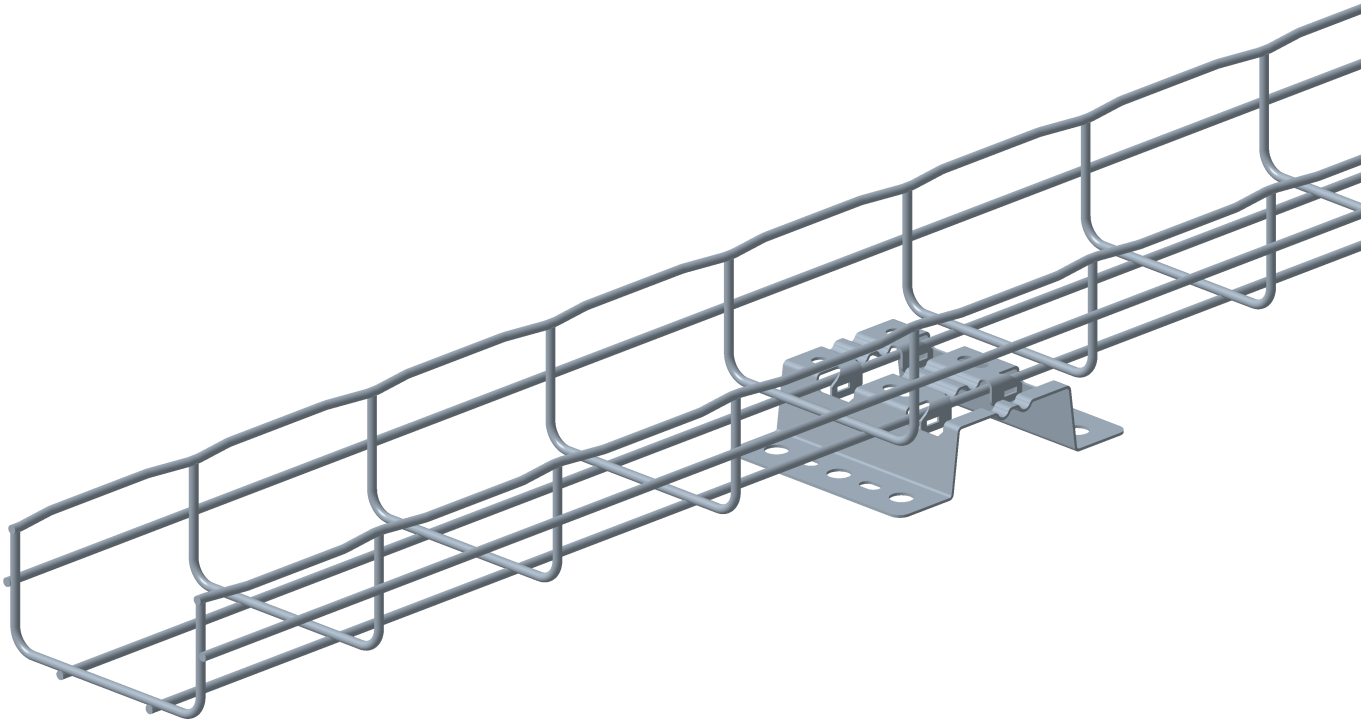
3. INSTALLATION