128, av. du Maréchal-de-Lattre-de-Tassigny - 87045 LIMOGES Cedex
Tél. : 33(0)5 55 06 87 87
www.legrand.com

Prefabricated Busbar System XCP-S Aluminum 1600

Cat.No(s):
see relative catalog for detailed reference tables.

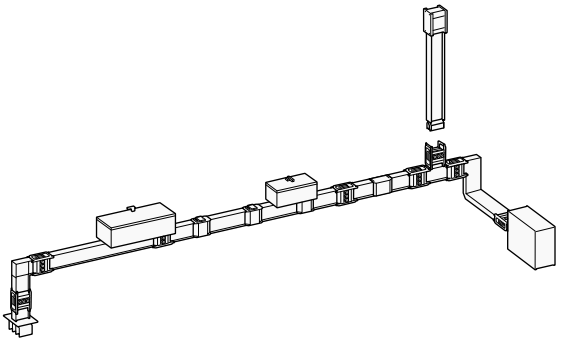

CONTENTS **Page**

1. Technical features. 1
2. Composition. 3
3. Accessories 8
4. Standards and regulations 12
5. Other information 12

1. TECHNICAL FEATURES

The prefabricated busbar system XCP-S is the optimized solution for the majority of electrical installations. Thanks to the optimized conductor cross-sections, XCP-S offers a lightweight and compact design while ensuring reliable performance and ease of installation. Its balanced design makes it ideal for a wide range of commercial and industrial applications, combining efficiency, flexibility and cost-effectiveness.

All drawings are for illustrative purposes only and do not represent the actual dimensions of the product.

Thermal correction factor for ambient temperatures	
Ambient temperatures	KT factor
-5°C	1.24
-0°C	1.21
10°C	1.15
15°C	1.12
20°C	1.09
25°C	1.06
30°C	1.03
35°C	**1**
40°C	0.97
45°C	0.93
50°C	0.9

Ambient temperature ≥ 35°C: Use the coefficient to limit the current and prevent the product from overheating to levels dangerous for the insulators

Ambient temperature < 35°C: The overload does not comply with the "delta T" regulatory limits, but it can be sustained indefinitely without compromising the product's functionality.

The range is designed to trunk several bars into a single structure, which facilitates its installation compared to independant busbars.
Three combinations of conductors are available:

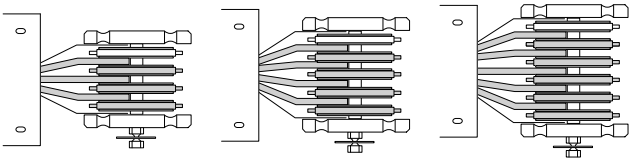

3 Conductors. 4 Conductors. 5 Conductors.

XCP-S Aluminum 1600 has a single bar trunking system.

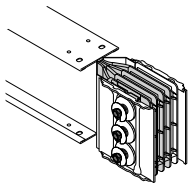

■ 1.1 Dimensions

The lengh and the heights vary according to the rating, but are the same for all three combinations of conductors (3, 4 or 5 conductors):
L 120 mm x H 200 mm.

■ 1.2 Degree of protection

IP55 or IP65 (for energy transportation only) on demand.

■ 1.3 Installation modes

Flat position.

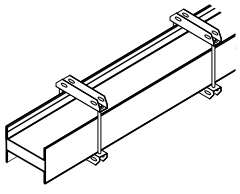

Edgewise position.

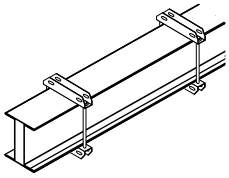

1. TECHNICAL FEATURES *(continued)*

1.4 Technical data by conductors configuration

The datas in this section correspond to a 50 Hz frequency and refer to an ambient temperature of 35°C. For 60 Hz frequency, or operation at ambient temperatures different from 35°C, please contact Legrand.

		3 conductors 3P + PE	4 conductors 3P + N + PE	5 conductors- functional earth 3P + N + PE + FE	5C-double neutral 3P + 2N + PE
Rated current at 35°C ambient	In [A]	1600			
Overall dimension of the busbars	L x H [mm]	120 x 200			
Rated operational voltage	Ue [V]	1000			
Rated insulation voltage	Ui [V]	1000			
Frequency	f [Hz]	50			
Rated short-time current (1 s)	Icw [kA] rms	42			
Peak current	Ipk [kA]	88			
Allowable specific energy for three-phase fault	$I^2 t$ [$MA^2 s$]	1764			
Rated short-time current of the neutral bar (1 s)	Icw [kA] rms	-	42	42	42
Peak current of the neutral bar	Ipk [kA]	-	88	88	88
Rated short-time current of the protective circuit (1 s)	Icw [kA] rms	25	25	25	25
Peak current of the protective circuit	Ipk [kA]	53	53	53	53
Phase resistance at 20°C	R20 [mΩ/m]	0.041	0.041	0.041	0.041
Phase reactance (50 Hz)	X [mΩ/m]	0.015	0.015	0.015	0.015
Phase impedance	Z [mΩ/m]	0.044	0.044	0.044	0.044
Phase resistance to thermal conditions	R @*C [mΩ/m]	0.058	0.058	0.058	0.058
Phase impedance to thermal conditions	Z [mΩ/m]	0.059	0.059	0.059	0.059
Neutral resistance	R20 [mΩ/m]	-	0.041	0.041	0.021
Functional Earth resistance (FE)	R20 [mΩ/m]	-	-	0.041	-
Functional Earth reactance (FE)(50Hz)	XFe [mΩ/m]	-	-	0.015	-
Resistance of the protective bar (Pe type 1)	RPe [mΩ/m]	0.110	0.110	0.112	0.112
Resistance of the protective bar (Pe type 2)	RPe [mΩ/m]	0.025	0.025	0.025	0.025
Resistance of the protective bar (Pe type 3)	RPe [mΩ/m]	0.036	0.036	0.037	0.037
Reactance of the protective bar (50Hz)	XPe [mΩ/m]	0.039	0.039	0.039	0.039
Resistance of the fault loop (Pe type 1)	R0 [mΩ/m]	0.152	0.152	0.154	0.154
Resistance of the fault loop (Pe type 2)	R0 [mΩ/m]	0.066	0.066	0.066	0.066
Resistance of the fault loop (Pe type 3)	R0 [mΩ/m]	0.078	0.078	0.078	0.078
Reactance of the fault loop (50Hz)	X0 [mΩ/m]	0.054	0.054	0.054	0.054
Impedance of the fault loop (Pe type 1)	Z0 [mΩ/m]	0.161	0.161	0.163	0.163
Impedance of the fault loop (Pe type 2)	Z0 [mΩ/m]	0.085	0.085	0.085	0.085
Impedance of the fault loop (Pe type 3)	Z0 [mΩ/m]	0.095	0.095	0.095	0.095
Zero-sequence short-circuit average resistance phase - N	R0 [mΩ/m]	-	0.055	0.055	0.034
Zero-sequence short-circuit average reactance phase - N	X0 [mΩ/m]	-	0.020	0.020	0.013
Zero-sequence short-circuit average impedance phase - N	Z0 [mΩ/m]	-	0.059	0.059	0.037
Zero-sequence short-circuit average resistance phase - PE	R0 [mΩ/m]	0.124	0.124	0.126	0.126
Zero-sequence short-circuit average reactance phase - PE	X0 [mΩ/m]	0.044	0.044	0.044	0.044
Zero-sequence short-circuit average impedance phase - PE	Z0 [mΩ/m]	0.132	0.132	0.134	0.134

1. TECHNICAL FEATURES *(continued)*

■ 1.4 Technical data by conductors configuration *(continued)*

		3 conductors 3P + PE	4 conductors 3P + N + PE	5 conductors- functional earth 3P + N + PE + FE	5C-double neutral 3P + 2N + PE
Voltage drop with distributed load ΔV [V/(m*A)]10-6	cosφ = 0.7	44.2	44.2	44.2	44.2
	cosφ = 0.75	46.0	46.0	46.0	46.0
	cosφ = 0.8	47.7	47.7	47.7	47.7
	cosφ = 0.85	49.2	49.2	49.2	49.2
	cosφ = 0.9	50.5	50.5	50.5	50.5
	cosφ = 0.95	51.4	51.4	51.4	51.4
	cosφ = 1	49.8	49.8	49.8	49.8
Weight (Pe type 1)	[kg]	19.9	22.6	25.0	25.0
Weight (Pe type 2)	[kg]	24.9	27.6	30.2	30.2
Weight (Pe type 3)	[kg]	21.5	24.2	26.7	26.7
Degree of protection	IP	55 / 65*			
Insulation material thermal resistance class		B / F**			
Losses for the Joule effect at nominal current	P [W/m]	442			
Ambient temperature min/MAX ***	[°C]	-5 / 50			

*IP65 available on demand for straight feeder lines.
**Class F available on demand.
***For ambient temperatures different from 35°C apply the correction factor (Kt) and for ambient temperatures under -5°C contact the technical support.

2. COMPOSITION

Images are for illustrative purposes only and do not represent the actual product dimensions.

■ 2.1 Straight elements

Designed for transport and distribution (with tap off outlets) of highpower energy. Supplied with its pre-installed monobloc.

Reference temperature	35°C
Protection degree	IP55
Length (min/max)	500/3000 mm
Standard length	3000 mm
Thickness of metal sheet	1.5 mm
Number of conductors	3, 4 or 5
Paint	RAL 7035
Composition	Halogen free

Straight element for transport

The insulation between bars is ensured by a double sheet made with polyester film class B (130°C), and class F (155°C) thermal resistance available on demand. All plastic components have a V1 self-extinguishing degree (as per UL94); they are fire retardant and comply with the glowwire test according to standards.

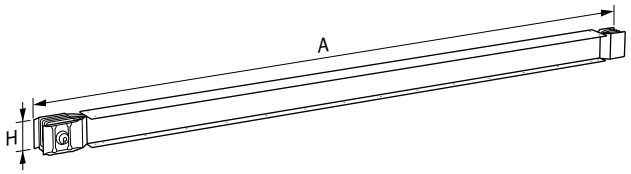

Dimensions	
Length A (min/max)	500/3000 mm
Standard length	3000 mm
H	200 mm

2. COMPOSITION *(continued)*

■ 2.1 Straight elements (*continued*)

Straight element for distribution
It is supplied with its pre-installed monobloc and it has tap-off outlets on each sides.

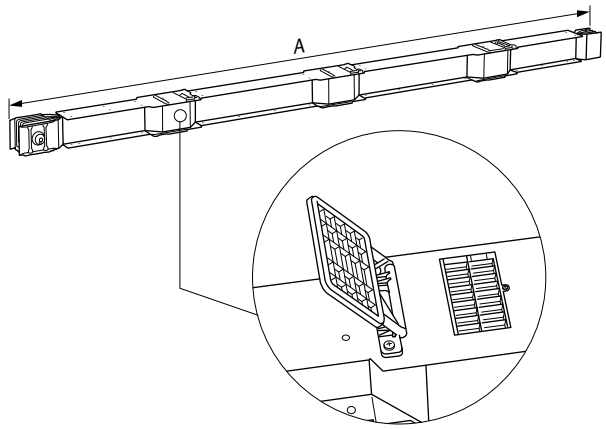

Dimensions	
Length A (min/max)	1000/3000 mm
Length A standard	3000 mm
H	200 mm

Tap-off boxes compatibility:

Length A	Tap-off boxes
1001-1250 mm	Type 1 and 3 removable boxes
1250-3000 mm	Any type of removable box

Straight elements for distribution have outlets on the upper side at preset distances of 850 mm on both sides*.

Length A	Number of outlets
3000 mm	3 + 3
1001-1500 mm	1 + 1
1501-2000 mm	2 + 2
2001-2500 mm	2 + 2
2501-2999 mm	3 + 3

*It is possible to have the outlets in special positions.

Tap-off outlets combination available on demand:

Length A	Number of outlets (on demand)
1501-2000 mm	1 + 1
2001-2500 mm	1 + 1
2501-2999 mm	1 + 1 and 2 + 2
3000 mm	1 + 1 and 2 + 2

■ 2.2 Elbow

Supplied with a pre-installed monobloc, these elements allow any change of direction with standard or special solutions.

Horizontal

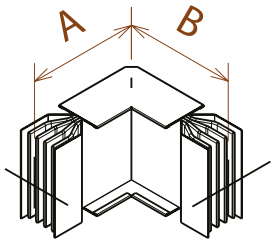

A = 300 mm B = 300 mm

Vertical

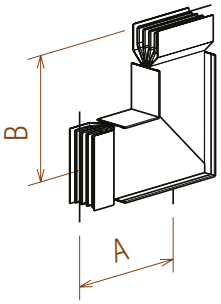

A = 350 mm B = 350 mm

Double horizontal

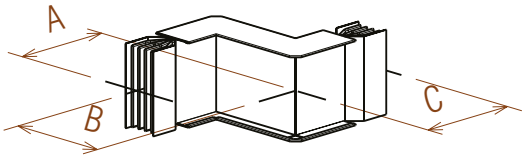

A = 300 mm B = 300 mm C = 300 mm

Double vertical

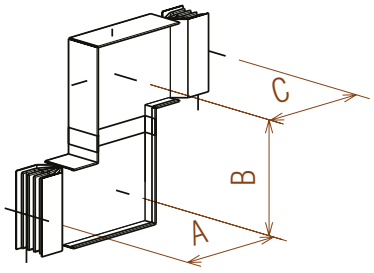

A = 350 mm B = 350 mm C = 350 mm

2. COMPOSITION *(continued)*

■ 2.2 Elbows (*continued*)

Double horizontal + vertical or Double vertical + horizontal

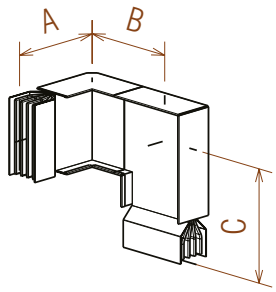

A = 350 mm B = 350 mm C = 300 mm

T (horizontal and vertical)

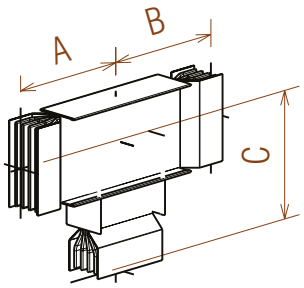

A = 350 mm B = 350 mm C = 350 mm

■ 2.3 Fire barrier elements EI120 (EN 1366-3)

When the busbar system crosses fire resistant walls or ceilings, it must be fitted with appropriate fire barriers. The fire barrier must always be positioned in the middle of the fire resistant wall or ceiling crossed by the busbar.

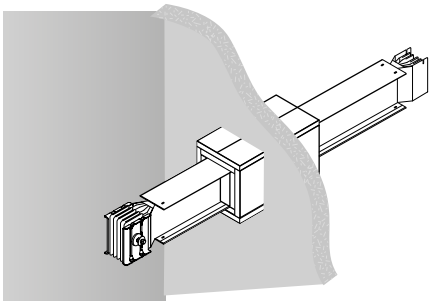

Dimensions	L 630 mm x H 280 mm
Type of fire barrier	Internal and External

To comply to the Certification of Fire resistance it is necessary to install both internal (not required in few ratings) and external fire barrier supplied by Legrand.
Once the installation is done, all cavities must be sealed with material meeting current regulations for the required building fire resistance class.

■ 2.4 Expansion element

The expansion element can absorb expansion and contraction of both the busbar system section and the building.
Maximum permitted length: ± 50 mm approximately.

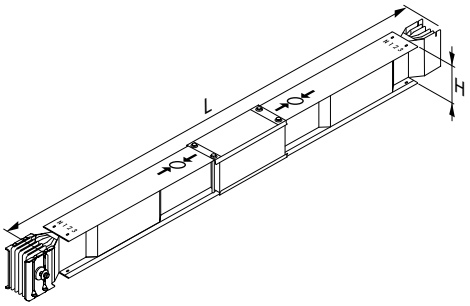

Dimensions: L 1500 mm x H 200 mm.

Conditions of installation

The expansion element must be placed at the building's expansion joints or along lines exceeding a certain length, where the monobloc is unable to absorb the expansion.

In general, for straight sections, it is recommended to include an expansion element every 30–35 meters. However, the presence of this element may vary depending on the system configuration, the type of supports used, and the components present along the line.

For more details, it is recommended to consult the design guide to assess each specific case. In case of doubt, contact Legrand.

No expansion element is required when:the section is not straight the straight section is less than or equal to 35 m.

Particular attention shall be paid when fire barrier elements or T-elements are present, as these components act as fixed points in the installation.

In such cases, the maximum distance between expansion elements shall be limited to 15 m.

For specific configurations or in case of doubt, please contact Legrand.

Examples:

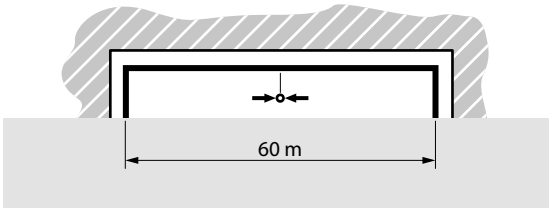

60 m long straight line section = 1 expansion element at the center

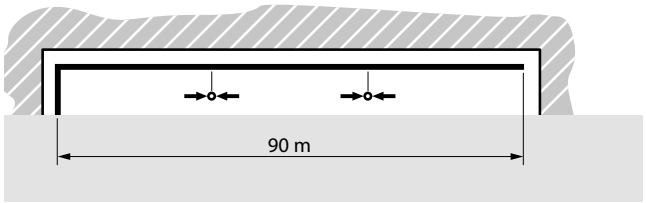

90 m long straight line section = 2 expansion elements, one every 30 m

2. COMPOSITION *(continued)*

■ 2.5 Phase transposition elements

Phase balancing element

Straight elements with phase balancing are used to reduce and balance mutual phase reactance and impedance in case of long lines.

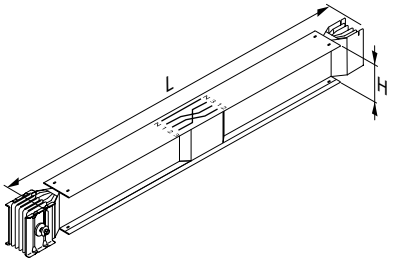

Dimensions : L 1200 mm x H 200 mm.

For particular long sections (> 100 meters) it is recommended to install two transposition elements (one at 1/3 and one at 2/3), to balance the electric system impedance.

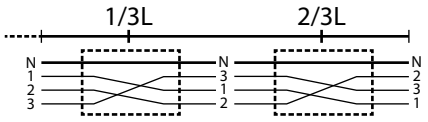

That way, it will be possible to have along the installation path all the possible combination of reciprocal positions among phases, minimising load losses.

If it is necessary to have the same phase sequence at the start and the end, use 3 phase balancing elements.

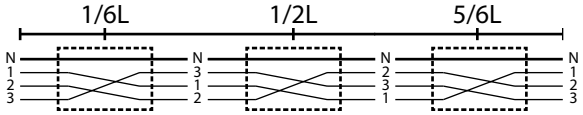

Phase inversion elements

It is used in the connections between the transformer and the electric board, or in the connection between electric boards, when the starting sequence is different to the arrival sequence.

BEWARE: use phase inversion elements only for transport paths, and not for derivations. For any doubts please contact Legrand.

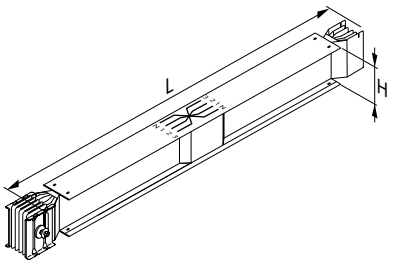

Dimensions : L 1200 mm x H 200 mm.

Electric scheme:

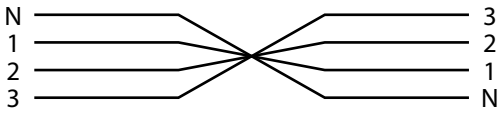

Neutral rotation element

It is used to adapt the sequence of the busbar phases to the sequence of the connections required at the ends of the connections, if they are different. In the connection between electric boards, the neutral jump is normally used, as only the neutral position is normally identified.

BEWARE: use neutral rotation elements only for transport paths, and not for derivations. For any doubts please contact Legrand.

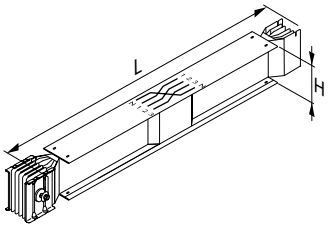

Dimensions : L 1000 mm x H 200 mm.

Electric scheme:

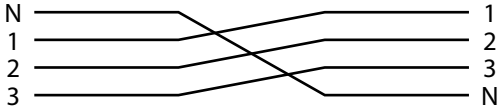

■ 2.6 Feed unit

It is used at the end of the lines, when the busbar must be powered using cables.

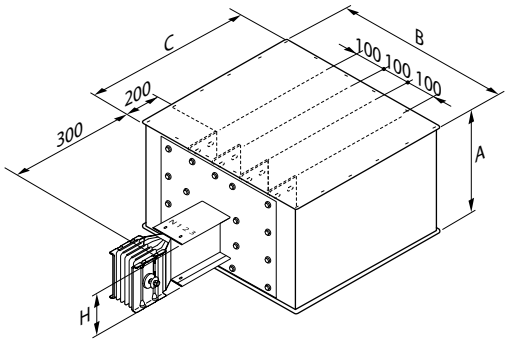

Dimensions	
A	320 mm
B	615 mm
C	810 mm
H	200 mm
Connection holes	15x20 mm

Available versions:
- with monobloc,
- without monobloc,
- special dimensions on demand.

2. COMPOSITION *(continued)*

■ 2.6 Feed units *(continued)*

Rising main feed unit
It is used at the departure of the riser main lines, when the busbar must be placed close to the wall and powered using cables. It allows the busbar to be installed 40 mm away from the wall.

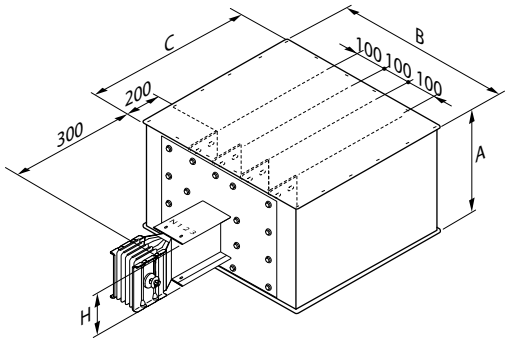

Dimensions	
A	320 mm
B	615 mm
C	810 mm
H	200 mm
Connection holes	15x20 mm

Available versions:
- with monobloc,
- without monobloc,
- special dimensions on demand.

■ 2.7 Connection interface

Standard connection interface
It is used at the end of the lines to connect the busbar to boards or transformers.

Available versions:
- right version (without monobloc),

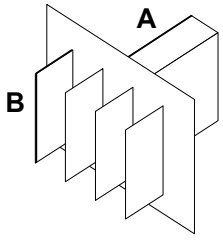

- left version (with monobloc),

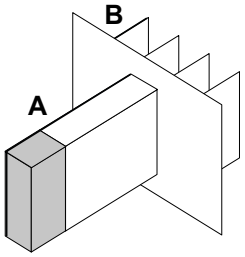

- special solutions on demand.
For example: length, spacing between bar conductors, drilling, etc.

Interface with exit bars for panel boards

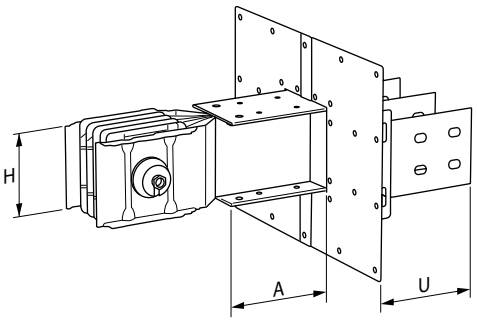

Dimensions for all type of bars	
U (min/max)	150/400 mm
U standard	200 mm
A (min/max)	200/1299 mm
A standard	300 mm
H	200 mm

Interface with exit bars for transformers

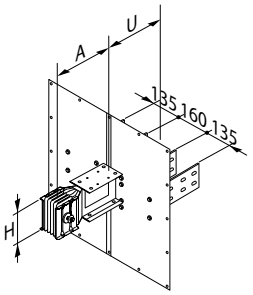

Dimensions for all type of bars	
U (min/max)	300/400 mm
A (min/max)	200/1299 mm
H	200 mm

Flange size details.

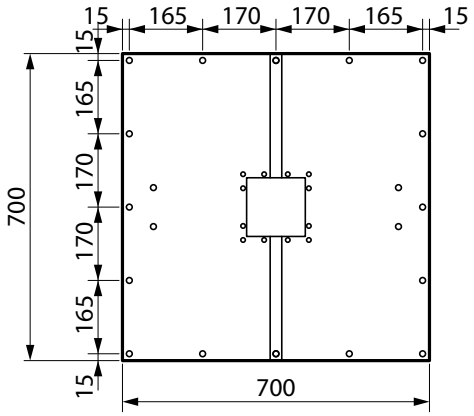

3. ACCESSORIES

■ 3.1 Adapter (IP68-IP55)

It is used to joint XCP and RCP elements.

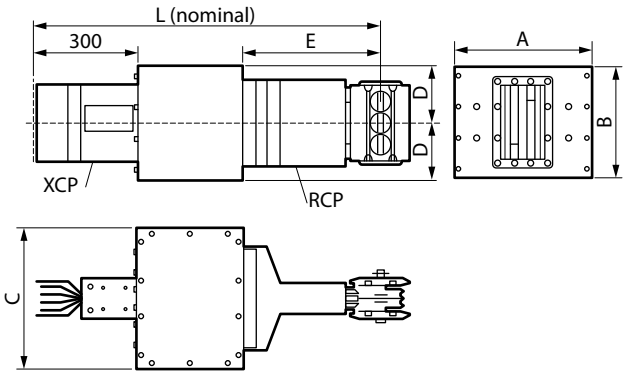

Dimensions for conductor combinations 3C, 4C, 5C	
A	400 mm
B	280 mm
C	310 mm
D	140 mm
E	400 mm
L	1000 mm

■ 3.2 Brackets

Brackets solutions are adapted and certified for any type of installation, even the most difficult environments:
- installations subjected to strong vibrations,
- installations in seismic environments.

Horizontal suspension brackets

Edgewise installation:

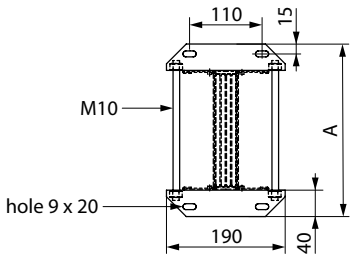

A = 280 mm.

Flat installation:

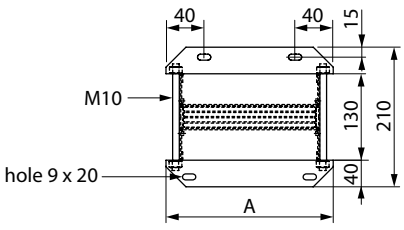

A = 315 mm.

Brackets for vertical elements

Suspension	Type of bracket
Wall brackets	Bracket with springs
	Rigid bracket
	Rigid bracket with springs
Floor brackets	Bracket only

*Contact Legrand for more details.

For brackets with springs, the 6 springs type is suggested:

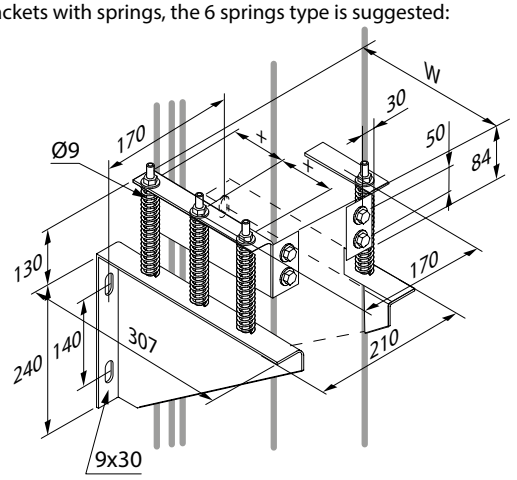

Dimensions	
W	200 mm
X	80 mm

■ 3.3 End cover IP55

The end cover is the component that ensures an IP55 protection degree at the end of the line.

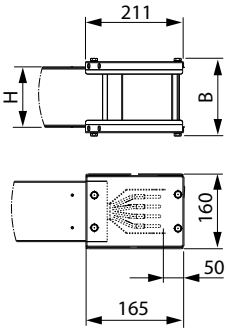

Dimensions	
H	200 mm
B	240 mm

3. ACCESSORIES *(continued)*

■ 3.4 Protective bellow

It is recommended for the protection of the interface connection on panel boards, dry-type transformer with enclosure and oil-type transformers.

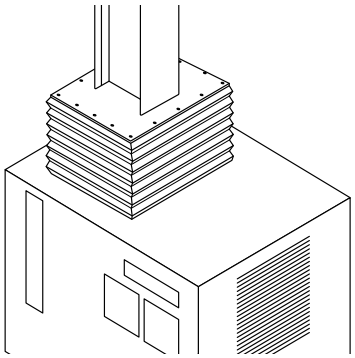

For more details on protective covers for applications, please contact Legrand.

■ 3.5 Flexible braid connections

It is used to connect the transformer to the connection interface of the busbar when mechanically uncoupling the two elements is required to prevent the transmission of vibrations.
It is mandatory to use silver-plated copper surfaces in contact with the transformer terminals.

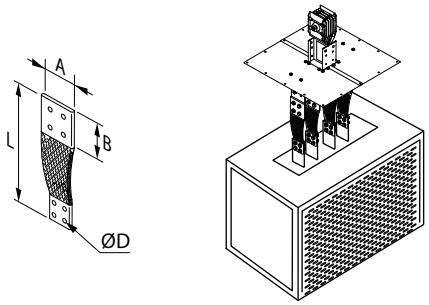

Dimensions	
L (min)	300 mm
L (max)	> 750 mm

These accessories have to be adapted to specific requirements.
The cross-section of the braids varies according to the system type (heavy-duty or standard).
When ordering, please specify the dimensions of A, B, Ø D holes on both transformer and busbar side, and length L.
The distance between the phases can be designed according to your need.
For customized solutions, with special drillings or for insulated flexible braid, please contact our technical department.

■ 3.6 ATR element

It is used to connect to electric boards or transformers and is similar to straight elements.
It may be used for connection to both cast resin and oil transformers.
The ATR element allows the installation of connection interfaces directly on the vertical section of the transformer terminals.

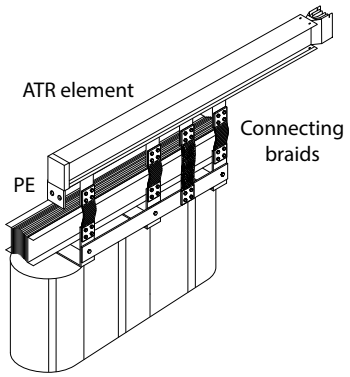

■ 3.7 Tap-off boxes

Rated current: 32 A-630 A.
It is used for connecting and energizing electric loads.
Available fibre-glass or metal sheet and equipped with a sectioning cover that can be installed and removed while the busbar is energised.
Type of tap-off boxes:
- for circuit breakers (compatible with Legrand's MCCB (not provided),
- available with hinged cover or with completely removable cover),
- with fuse carriers (fuses not included),
- with switch fuse (AC23) and a fuse carrier,
- empty,
- empty bolt-on type (to be installed on the junction on any rating elements, with or without tap-off outlets).

Dimensions (mm)
Fiber-glass taf-off boxes

Type 1
- (32 A)–with fuse carriers.

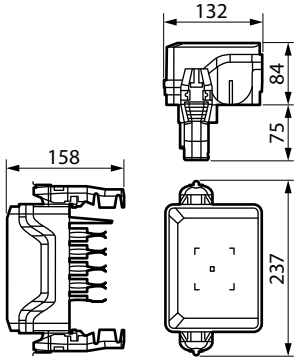

Type 2
- (63 A/160 A)–MCCB ready,

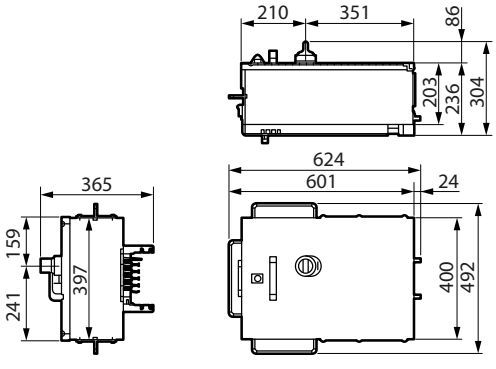

3. ACCESSORIES *(continued)*

■ 3.7 Tap-off boxes *(continued)*

Fiber-glass taf-off boxes
Type 2

- (63 A/125 A/160 A)–with fuse carriers/empty,

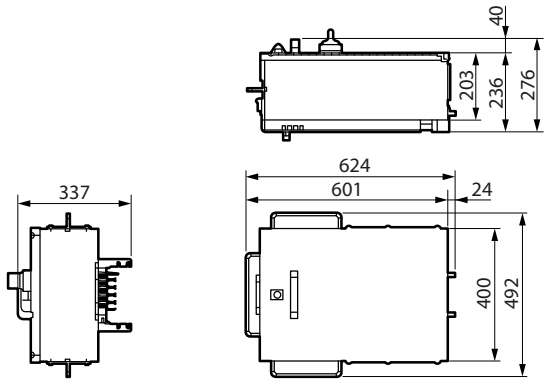

- Total dimensions with cover open.

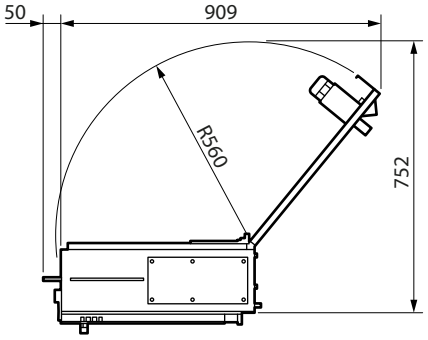

Type 3

- (250 A)–MCCB ready,

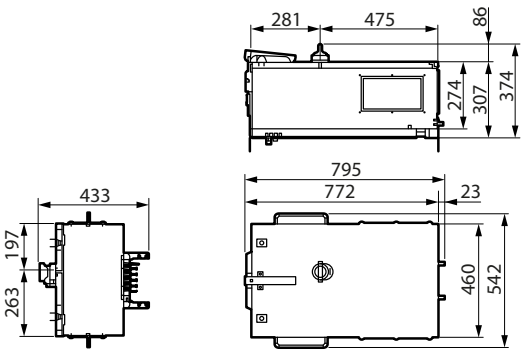

- (250 A)–with fuse carriers/empty,

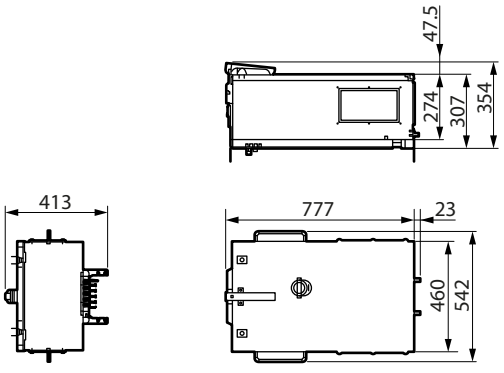

- Total dimensions with cover open.

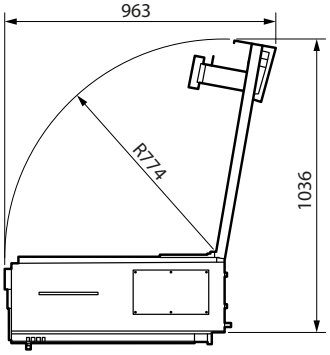

Metal tap-off boxes
Type 1

- (63 A/125 A/160 A)–MCCB ready,

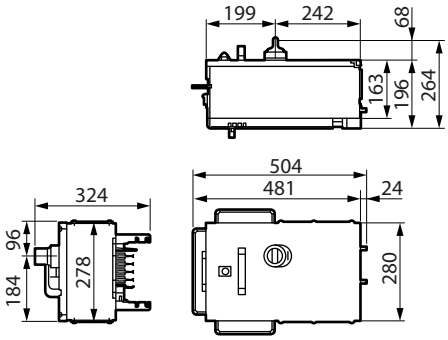

- (63 A/125 A/160 A)–with fuse carriers,

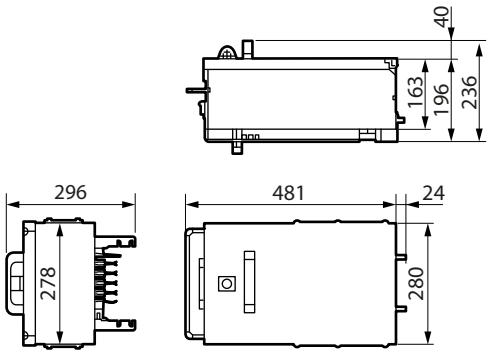

- (63 A/125 A/160 A)–empty,

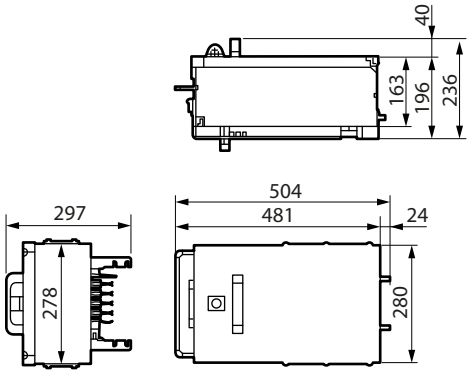

3. ACCESSORIES *(continued)*

■ 3.7 Tap-off boxes *(continued)*

Metal taf-off boxes

Type 1

- Total dimensions with cover open.

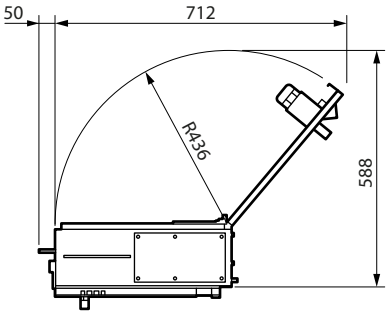

Type 2

- (250 A)–MCCB ready,

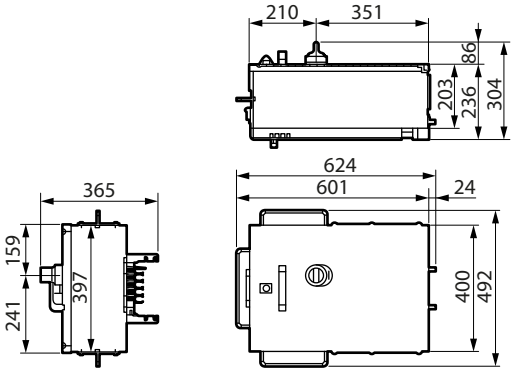

- (250 A)–MCCB ready (removable cover),

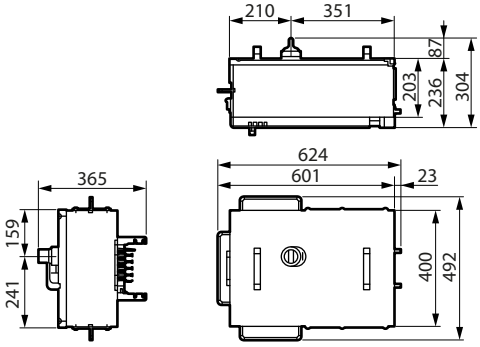

- (250 A)–empty/with fuse carriers,

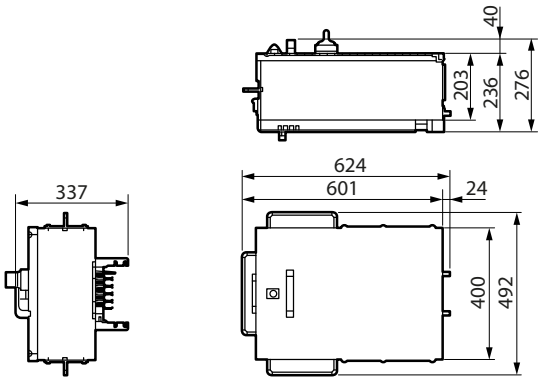

- Total dimensions with cover open.

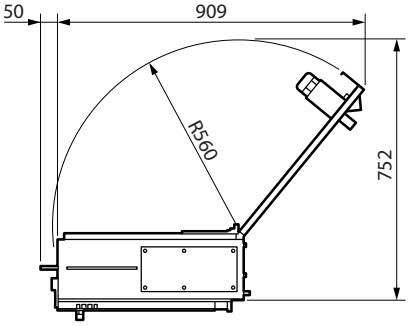

Type 3

- (400 A/630 A)–MCCB ready,

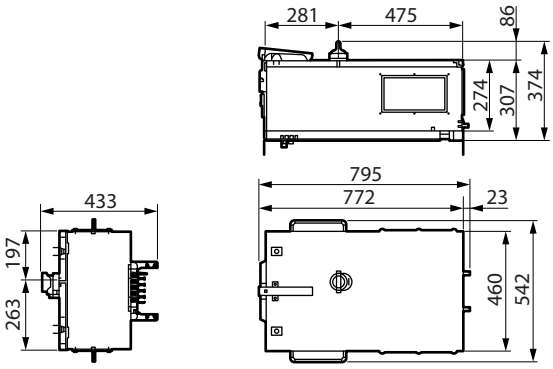

- (400 A/630 A)–with fuse carriers,

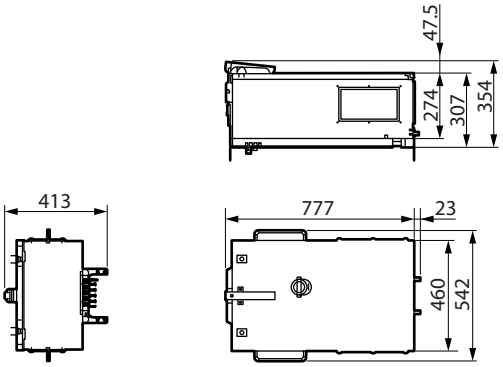

- Total dimensions with cover open.

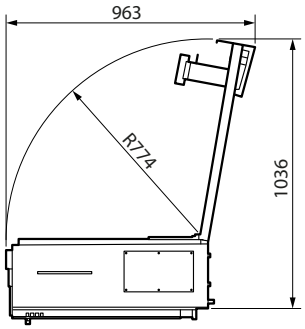

3. ACCESSORIES *(continued)*

■ 3.7 Tap-off boxes *(continued)*

Metal empty tap-off boxes bolt-on type
Available rating current: from 125 A to 1250 A.

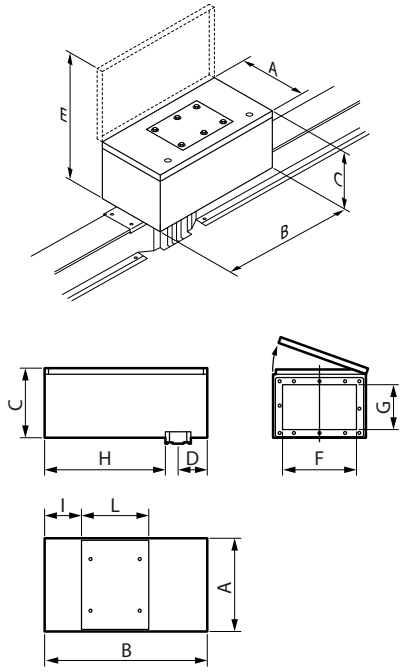

F x G → cables entry.
H-usable internal space.
L-internal metal plate.

Dimensions (mm)

In [A]	A	B	C	D	E	F	G	H	I	L
125										
250	365	630	270	115	630	290	180	465	142	260
400										
630	400	750	280	115	675	290	180	585	227	295
800										
1000	450	1050	300	115	745	380	210	885	254	545
1250										

4. STANDARDS AND REGULATIONS

XCP-S range is conform to the following standards:
- NF C 15-100: Low voltage electric installation.
- EN 61439-1: Low voltage equipment set-Part 1: General rules.
- EN 61439-6: Low voltage equipment set-Part 6: Prefabricated Busbar System (Ranking index France standards: C 63-421-6).
- UL 94: Tests for Flammability of Plastic Materials for Parts in Devices and Appliances.
- EN 60332-3-10: Tests on electric and optical fibre cables exposed to fire.
- Part 3-10: Tests for the assessment of the vertical flame spread of vertically mounted bunched wires or cables-Equipment.
- EN 1366-3: Technical installations fire resistance tests-Part 3: Calking.
- IEC 60085: Electric isolation-Thermal assessment and designation.

RoHS
Compliance with the 2011/65/EU Directive (RoHS), as modified by the 2015/863/EU Delegated Directive, on the restriction of the use of certain hazardous substances in electrical and electronic equipment.

REACH
The substances identified as SVHC (Substances of Very High Concern) according to the REACH Regulation (1907/2006), if present in the products at a concentration above 0.1% weight by weight, are declared inside the European SCIP database. At the date of publication of this document none of the substance listed in the annex XIV is found in this product.

WEEE
WEEE Directive (2012/19/EU): the sale of this product includes a contribution to the appointed environmental bodies of each European country in charge of handling, at the end of their life, the products falling within the scope of the EU Directive on Electrical and Electronic Equipment Waste.

For specific information, please contact Legrand support.

5. OTHER INFORMATION

PSZ5 : Software for tracing and quantifying the busbars and directional change components required for the project**.**

XLPro Calcul : Calculation notes creation software, addressed to installers, design office and maintenance operators. Definition of the electrical characteristics of a low voltage installation in compliance with the applicable standards

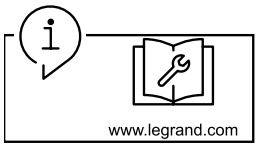

Technical guide: additional technical data, detailed electrical specifications, mounting information (environment, position), specific features of the various elements in the range etc.

Installer guide: installation procedures and commissioning.

User guide: provides information on recommended periodic checks of the installation and their frequency.

Operating conditions and applicability of technical data:
Unless otherwise indicated, the data reported in this document refers exclusively to test conditions defined by the relevant product standards. In particular, performance values (including rated current and temperature rise) are based on standardized laboratory test configurations as defined in EN 61439-1 and EN 61439-6.
For different operating conditions of the busbar trunking system within the installation context, reference shall be made to the regulatory requirements of the equipment, local regulations, and the design specifications of the system.

In actual installations, factors such as ambient temperature, ventilation, installation layout and load conditions may influence the thermal behaviour of the system. Where relevant, these aspects should be considered during the design phase, including the possible application f appropriate correction factors (derating).

For details on installation procedures, please refer to official Legrand technical guide.