128, av. du Maréchal-de-Lattre-de-Tassigny - 87045 LIMOGES Cedex
Tél. : 33(0)5 55 06 87 87 - Fax : 33(0)5 55 06 88 88
www.legrand.com

Arteor™ Advance
Connected indoor temperature and humidity sensor

Cat. No(s): AC5601MW/MB/MT

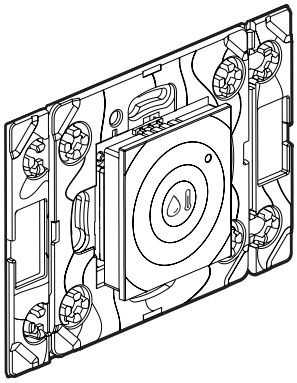

1. USE

This sensor measures the temperature and humidity inside a room.

The collected data appears in the Home + Control app, where it can be used to create automations, trigger alerts, or send notifications based on thresholds set by the user.

2. RANGE

Must be paired with a Legrand "with Netatmo" connected gateway.
To be equipped with a cover plate.

Matt White	Matt Black	Matt Titanium
AC5601MW	AC5601MB	AC5601MT

3. DIMENSIONS (mm)

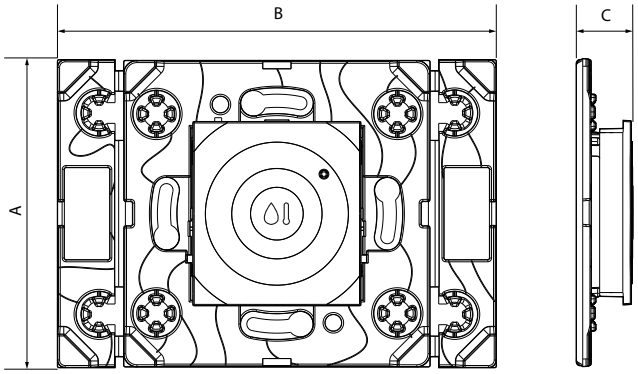

A	B	C
82	117	15

4. CONNECTION

Measurement thresholds

Temperature range: 0° C à + 50° C
Humidity range: 0 à 100%
Range: 180 meters in open field
Maximum operating height: <2 m

5. TECHNICAL CHARACTERISTICS

■ 5.1 Mecanical characteristics
Protection against impacts: IK 04
Protection against: IP 20

■ 5.2 Material characteristics
ABS and PC
UV-resistant

■ 5.3 Electrical characteristics
Battery: CR2450 - 3 V

Frequancy bands: 2,4 GHz à 2,4835 GHz
Power level: < 100 mW

■ 5.4 Climate characteristics
Storage temperature: 0° C à 45° C
Recommended installation temperatures : +5° C à + 35° C

6. CARE

Wipe the surface clean with a cloth.
Do not use: acetone, tar remover, or trichloroethylene.

Resistant to the following products: hexane, rubbing alcohol, soapy water, diluted ammonia, undiluted bleach diluted to 10%, window cleaner, and pre-moistened wipes.

Caution : Before using specific cleaning products, a preliminary test is required.

Battery Recycling Precautions

7. STANDARDS AND APPROVALS

The undersigned, LEGRAND, declares that the radio-electric equipment type (AC5601MW/MB/MT) complies with directive 2014/53/EU.
The full text of the EU declaration of conformity is available on the following website: **www.legrand.com/ecatalogue**