128, av. du Maréchal-de-Lattre-de-Tassigny - 87045 LIMOGES Cedex
Tel : 0 (+33) 5 55 06 87 87 Fax : 0 (+33) 5 55 06 88 88
www.legrand.com

# Urbano™
# TV/R/SAT socket (DAB+)

**Cat. No(s): UB4114GR/WH**

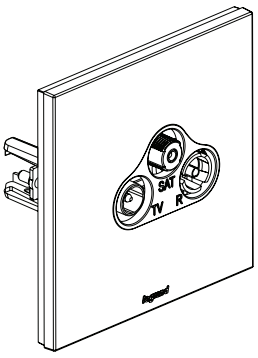


## 1. USE

TV/R/SAT (DAB+) connector mechanisms: allows reception of TV, radio and satellite signals.
UHD (Ultra High Definition) and DAB (Digital Audio) compatible Broadcasting or digital terrestrial radio).
The mechanisms are supplied with rocker, supports and plates.
Equipped with single-post plates.
Flush mounting mecanismes
Fixing with claws and/or screws.

## 2. RANGE

| Description | White | Grey |
|---|---|---|
| TV/R/SAT star socket | UB4114WH | UB4114GR |

## 3. OVERALL DIMENSIONS (mm)

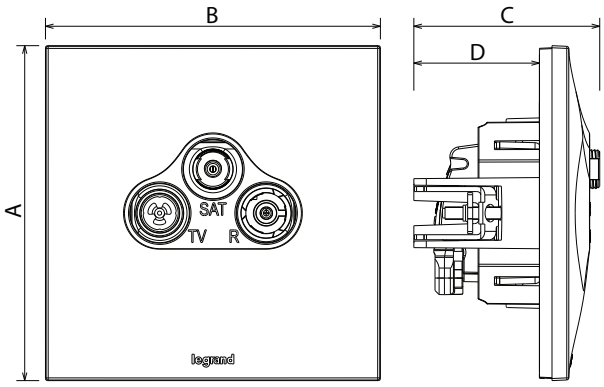


| References | A | B | C | D |
|---|---|---|---|---|
| UB4114GR/WH | 80 | 80 | 44 | 30 |

## 4. TECHNICAL CHARACTERISTICS

**■ 4.1 Protection index**
Protection against solid bodies and liquids: IP20
Protection against impacts: IK 04
Cable tensile strength 120 N: standard IEC 61169-24

**■ 4.2 Material characteristics**
Plate : ABS
Mechanism : Zamac
Support : PC
Claws: steel
UV-resistant
Halogen-free

**■ 4.3 Electrical characteristics**
- Characteristic impedance: 75 ohm
- Male connector Ø 9.52 mm
- Type F female connector to screw
- Class A shielding effectiveness
- Attenuation: 1 dB maximum
- Insulation resistance: IEC 61169-24 standard
- Frequency bands: TV : 5-68 /120-862 MHz
  R : 87,5-108 MHz / DAB 174-233 MHz
  SAT : 950-2400 MHz

**■ 4.4 Climate characteristics**
Storage temperature: - 10° C to + 70° C
Use temperature: - 5° C to + 40° C

## 5. CLEANING

Surface cleaning with a cloth.
Do not use: acetone, tar remover, trichloroethylene.

Maintenance with the following products: Hexane, Methylated spirit, Soapy water, Diluted ammonia, Bleach diluted to 10%, Window-cleaning products, Pre-saturated wipes.

**Caution:** A preliminary test should be carried out if other specific cleaning products are to be used.

## 6. STANDARDS AND APPROVALS

Compliance with standards of installation and manufacturing.
Refer to e.catalogue.