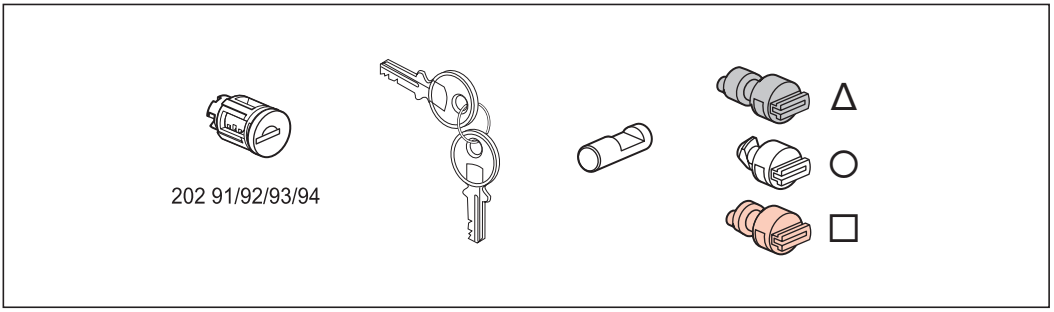

H < 1500

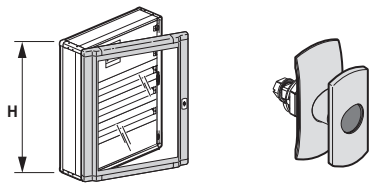

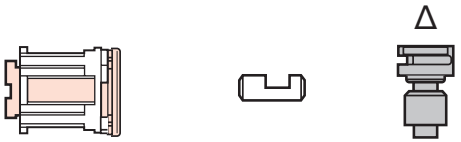

H > 1500

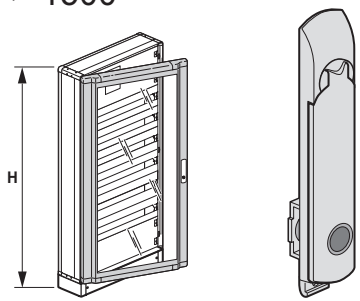

IP 55

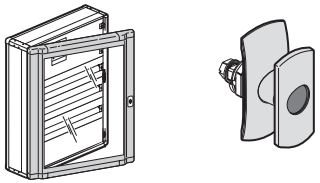

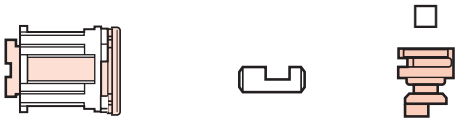

NE9163B/01

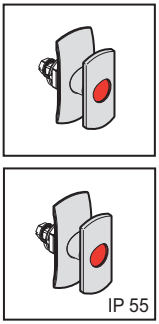

1

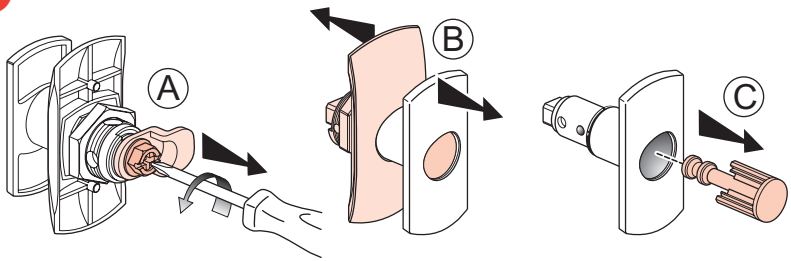

2

3

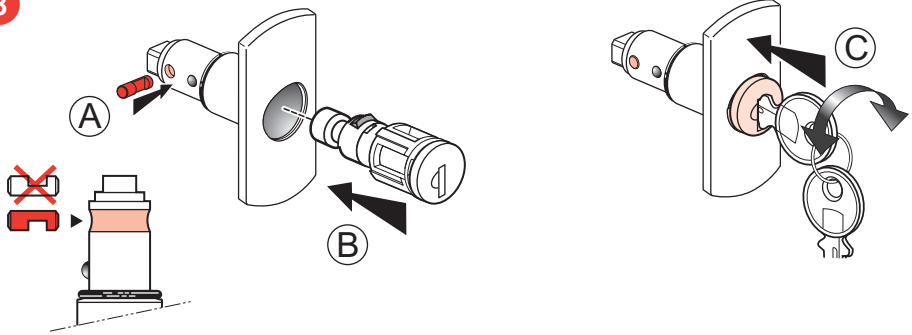

4

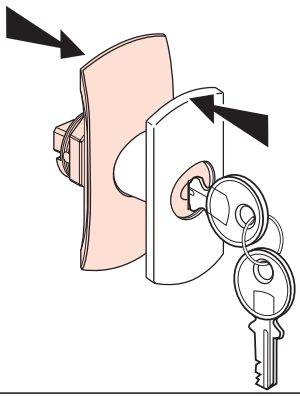

5

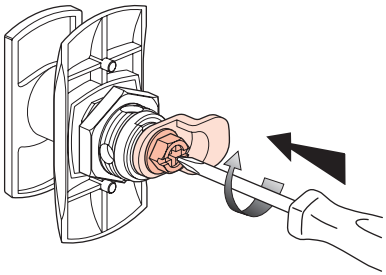

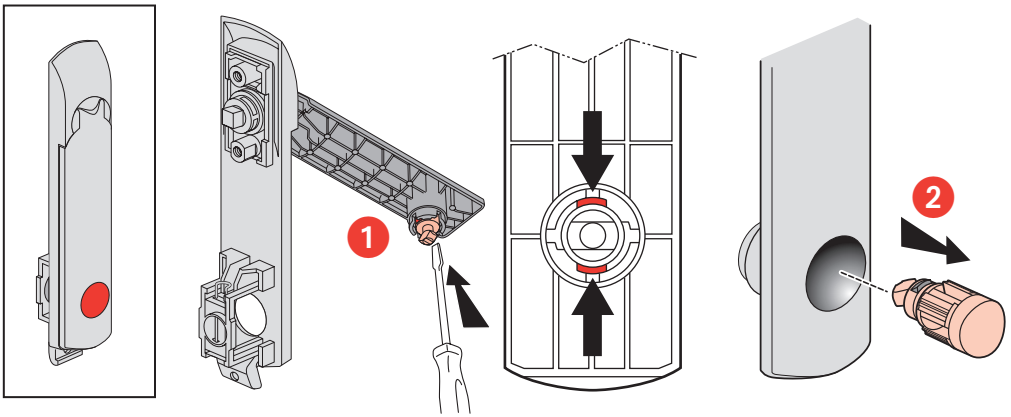

3

4

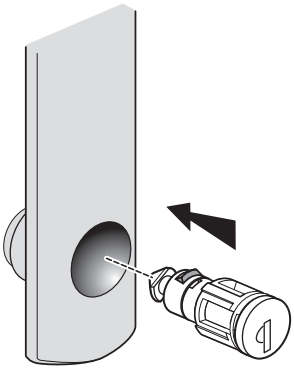
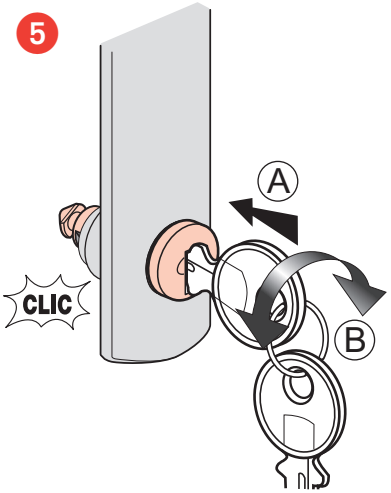
5