legrand®

1

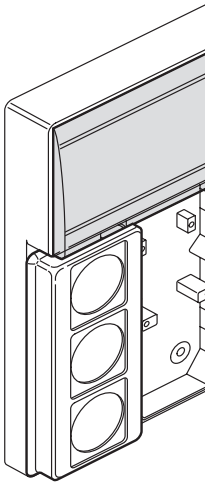

2 IP44 CEI/IEC

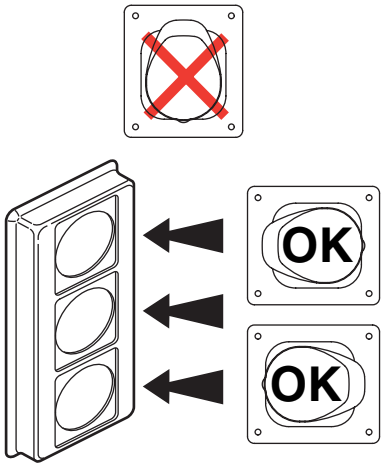

IP54 NFC/Domestic
(576 71/ 576 72)

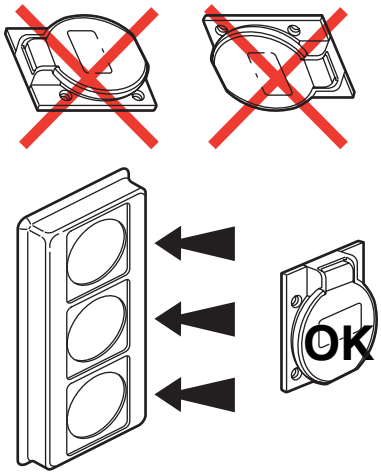

3 IP67 CEI/IEC

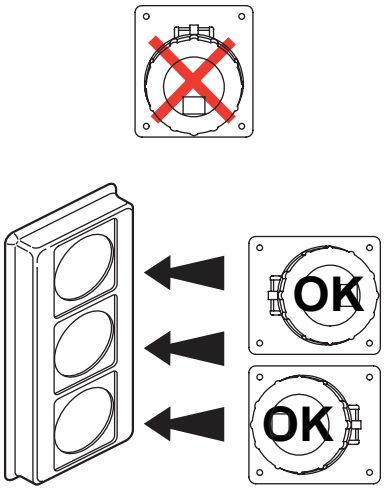

4

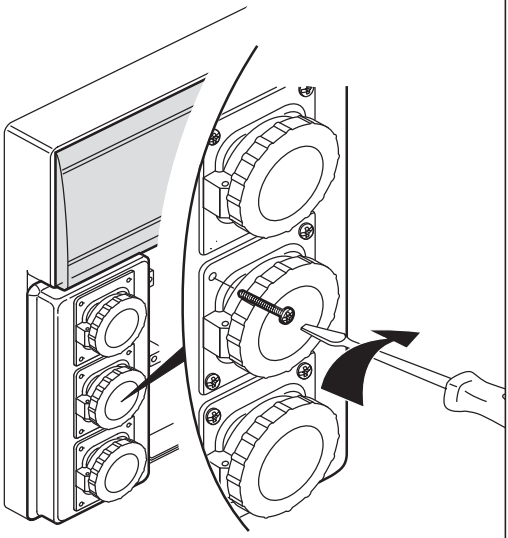

N2500410/01