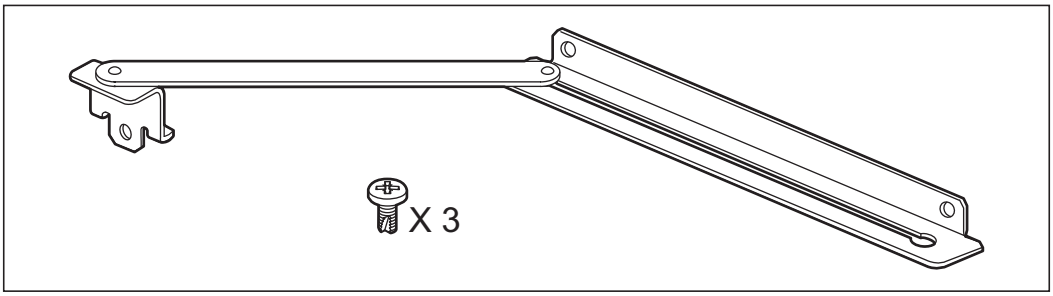

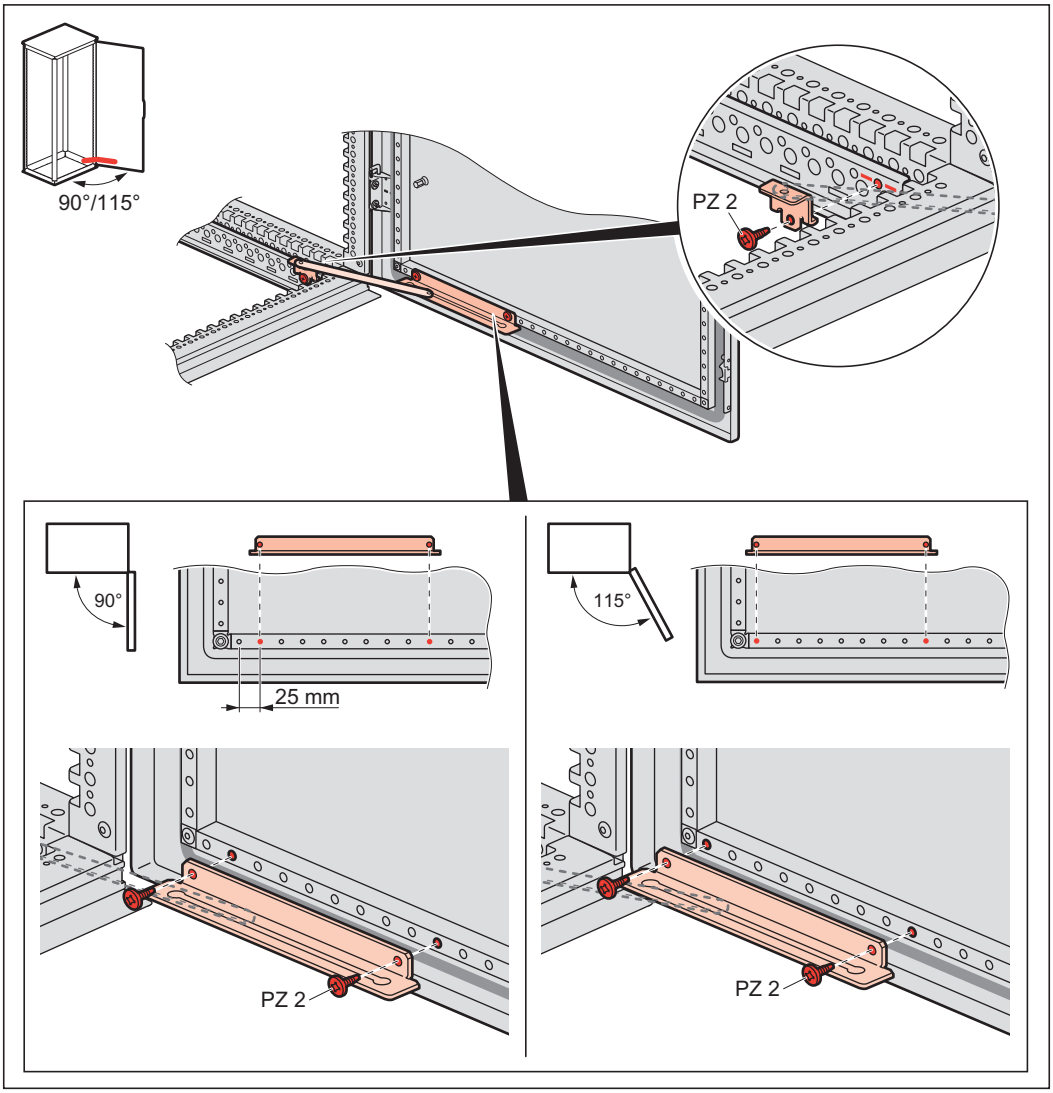

N041957/01 - H8759B