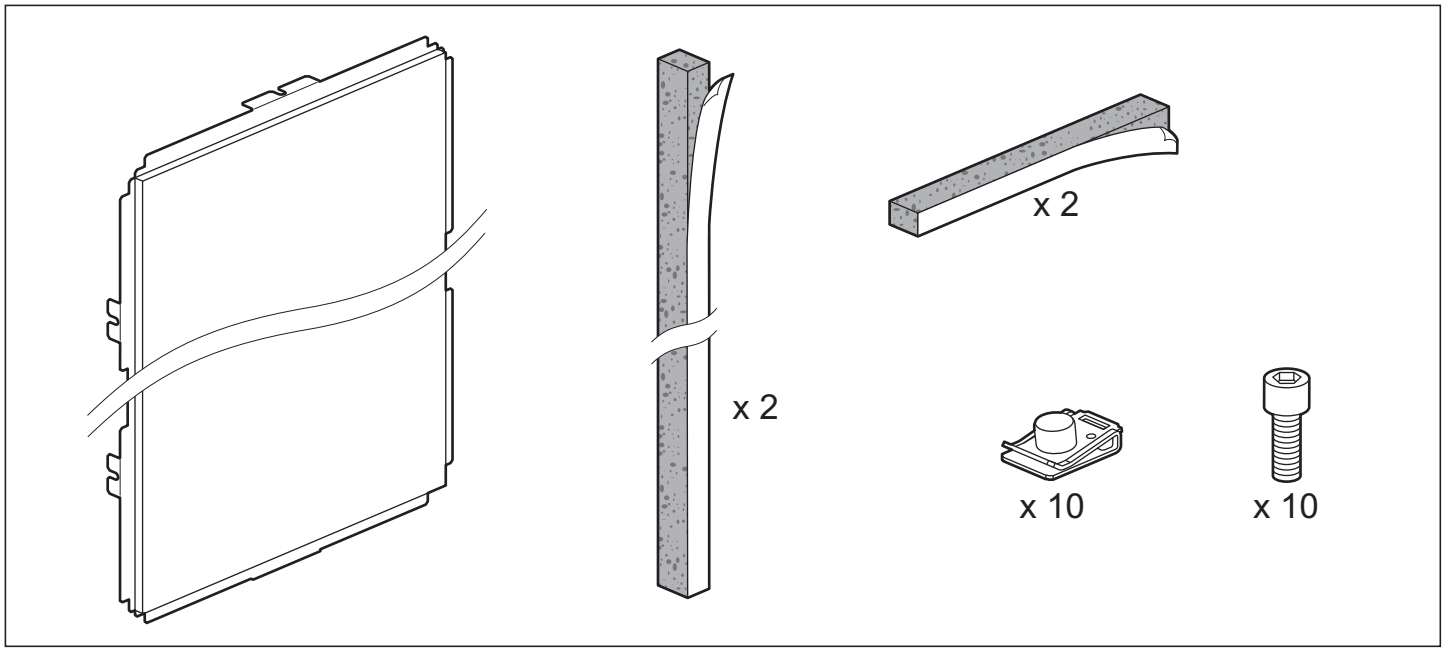

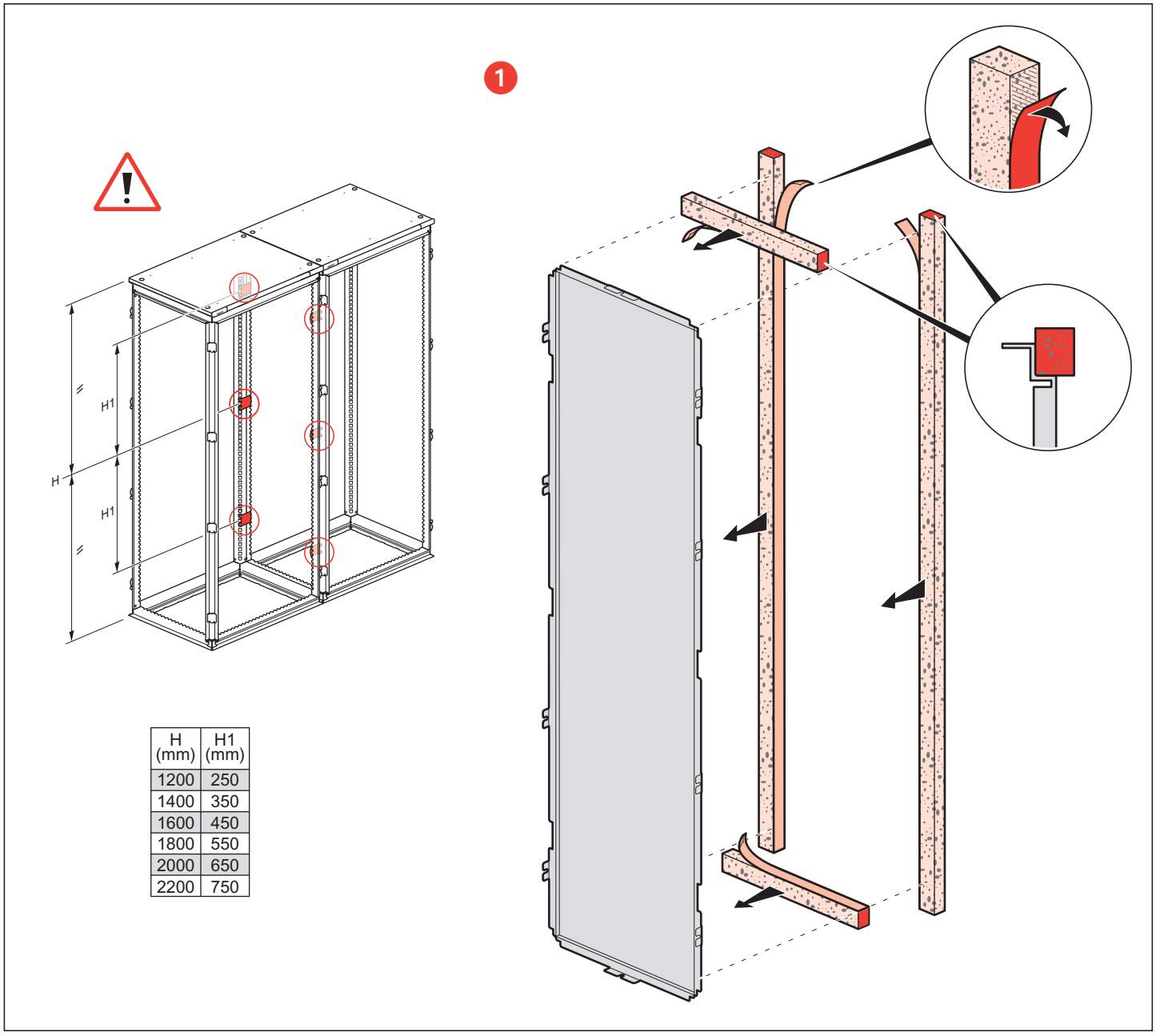

H (mm)	H1 (mm)
1200	250
1400	350
1600	450
1800	550
2000	650
2200	750

N041920/01 - H8767B

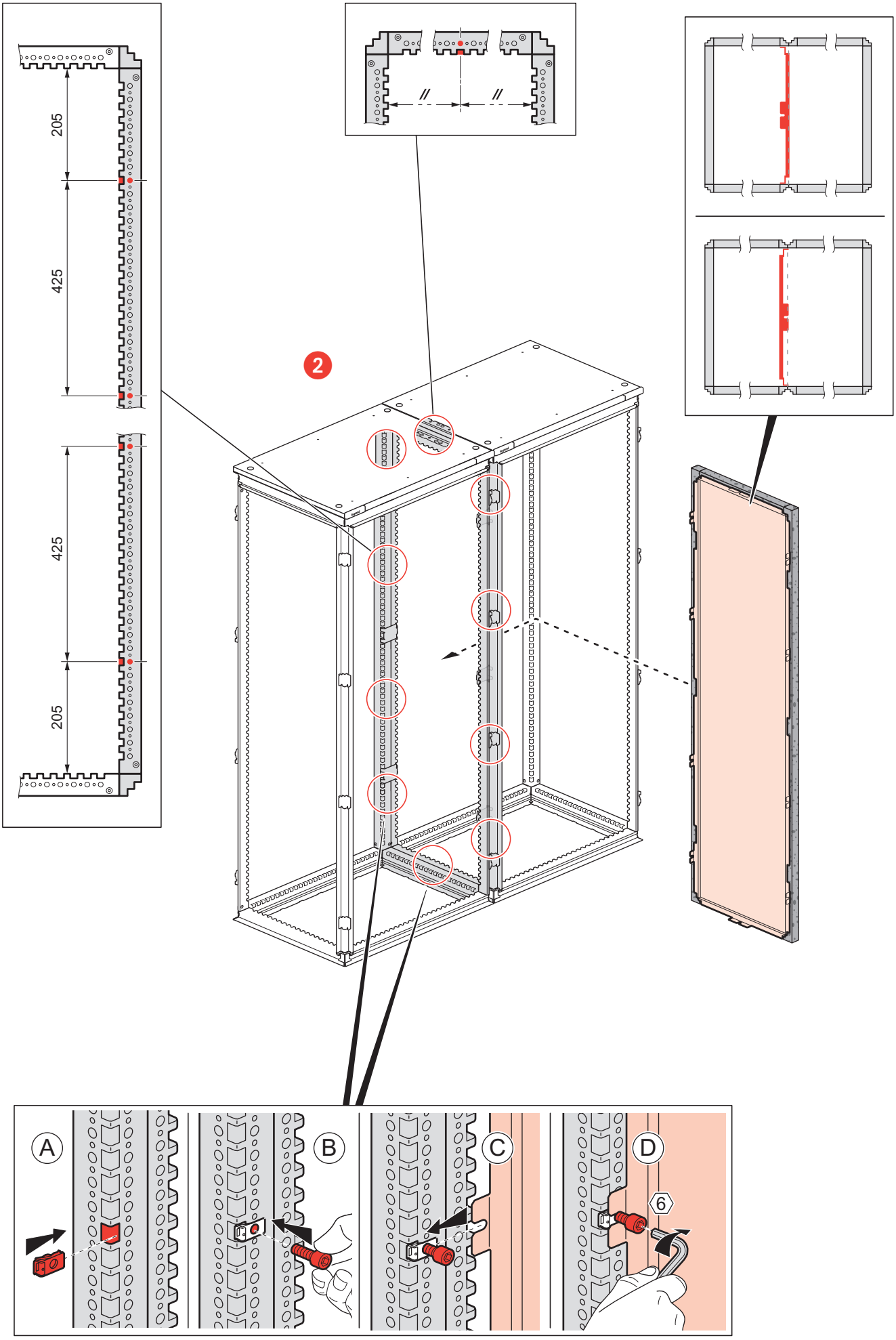

N041920/01-H8767B