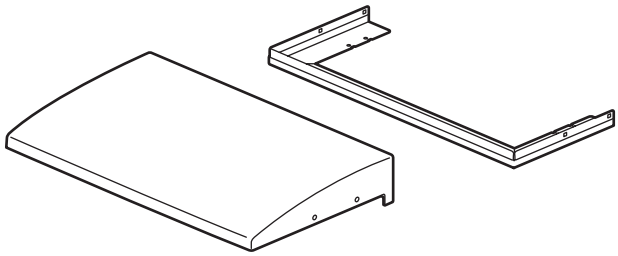

x 4

x 4

x 4

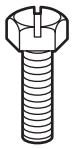
x 4

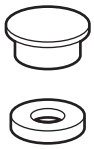
x 4
x 4

1

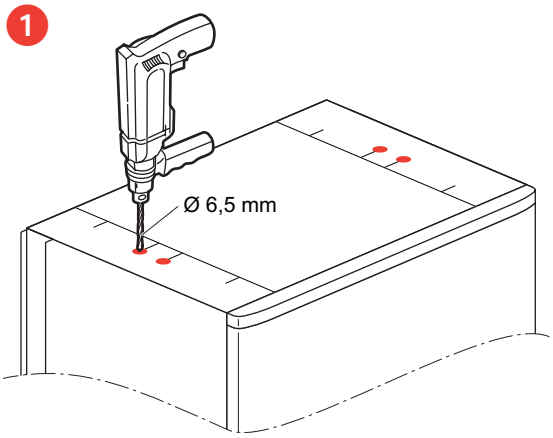

2

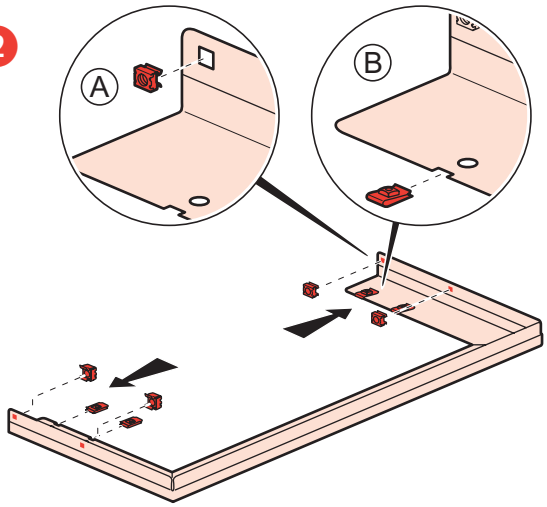

3

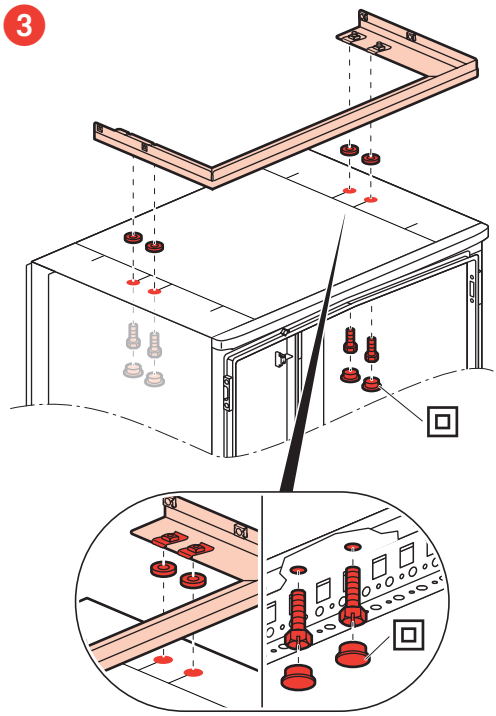

4

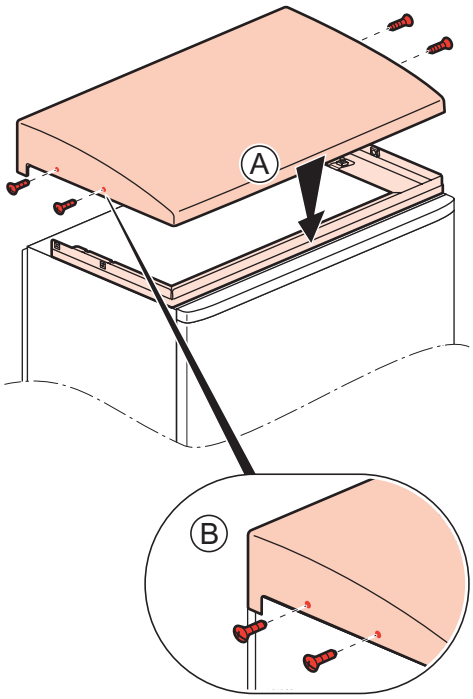

N041653/00