legrand®

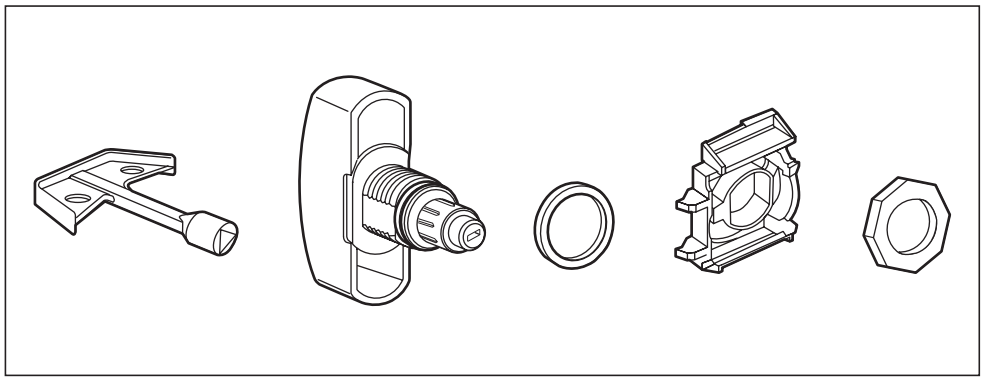

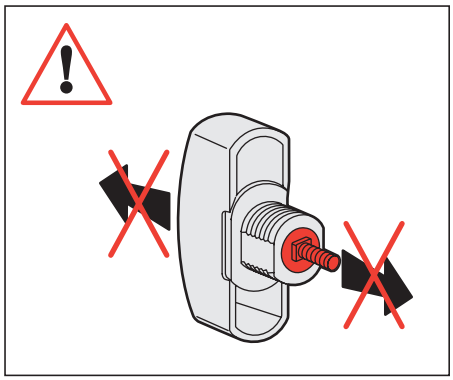

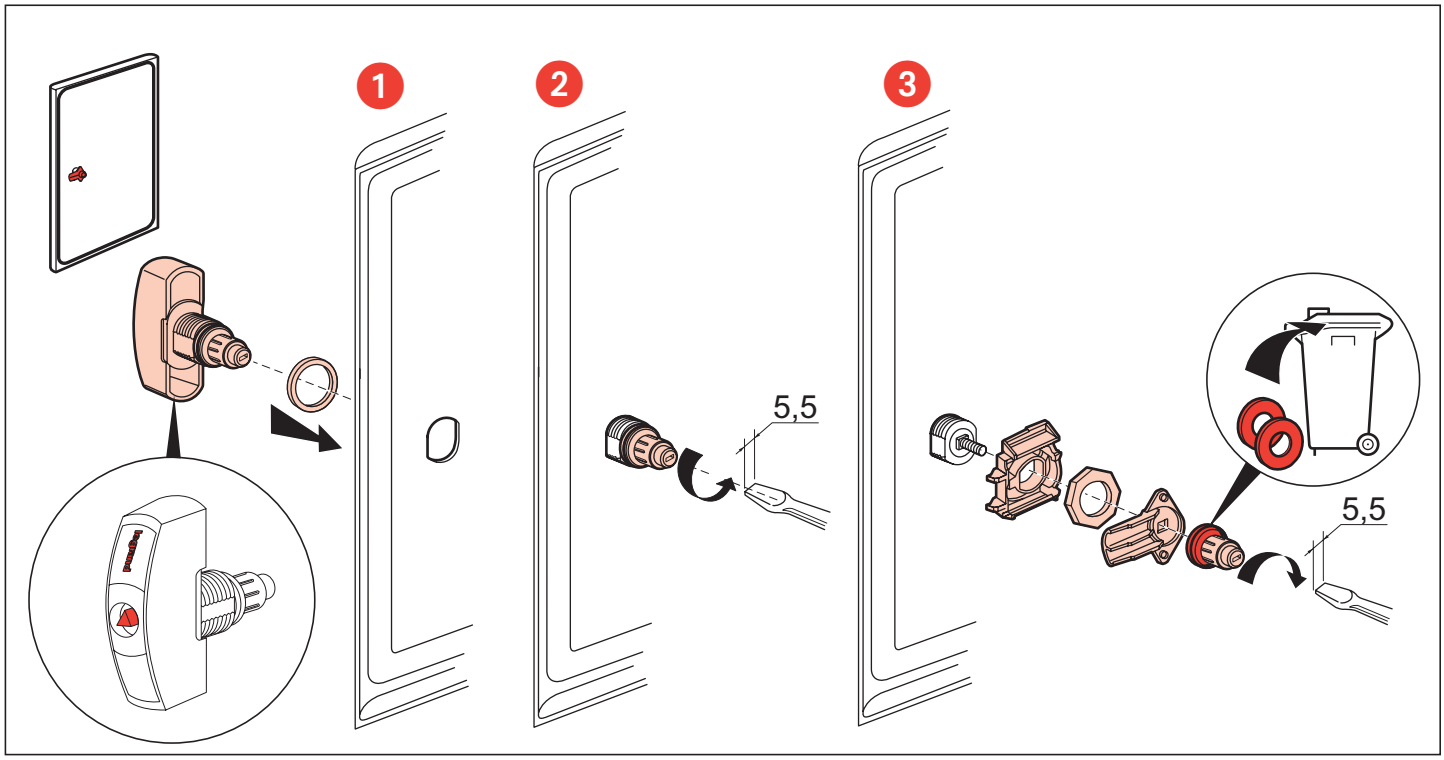

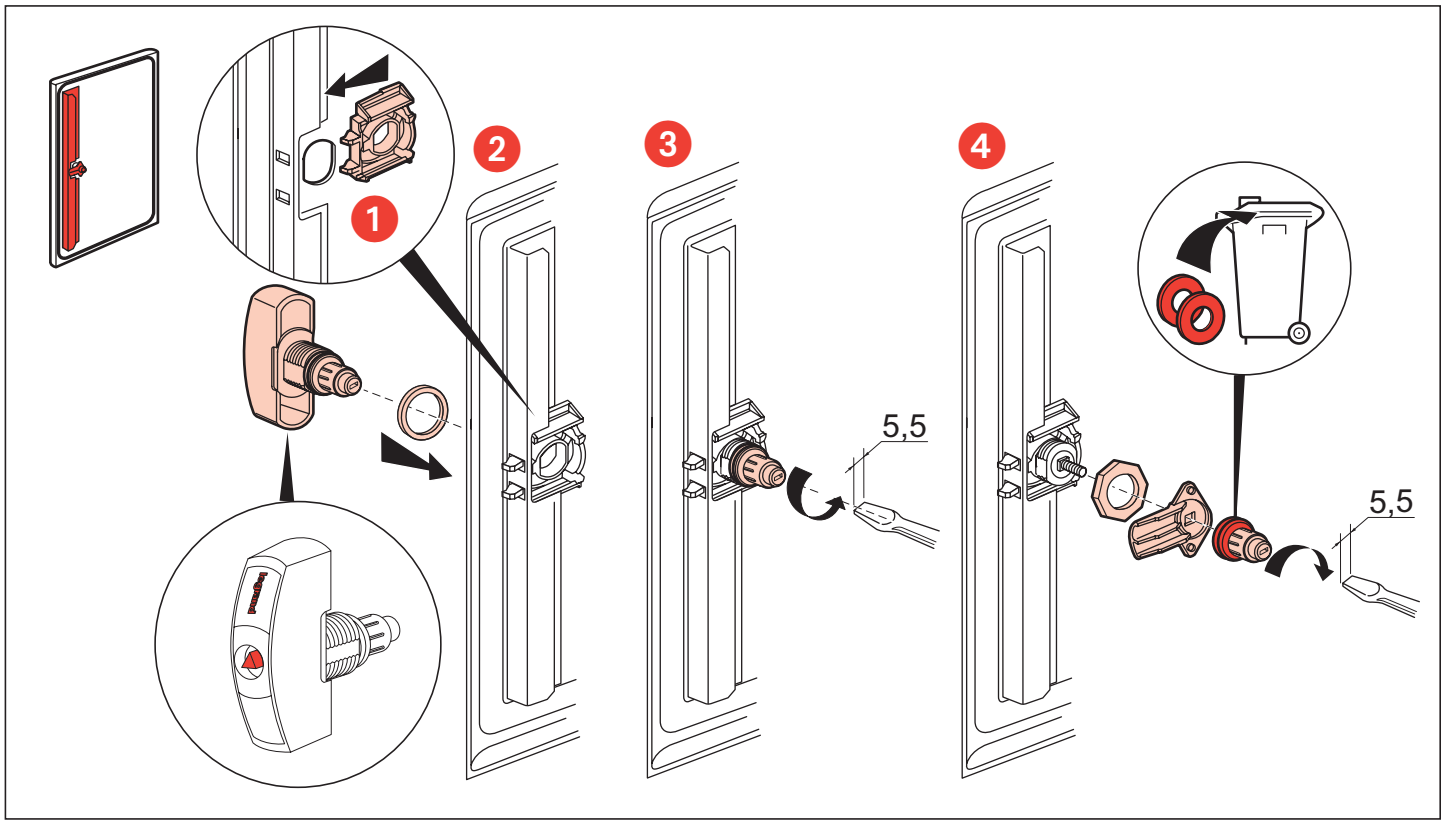

N041577/01