**Atlantic**
**364 01/04/06/16**

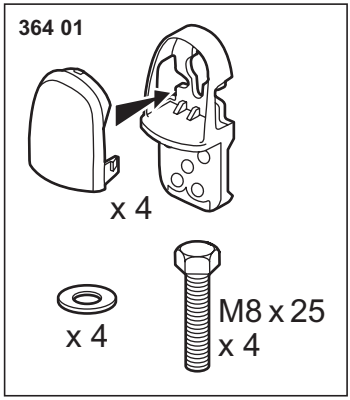


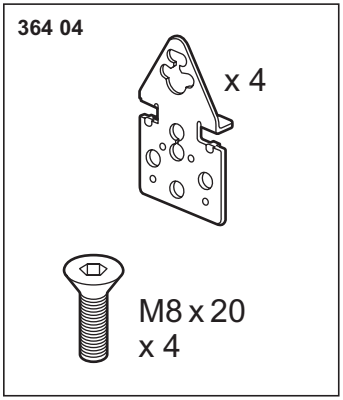


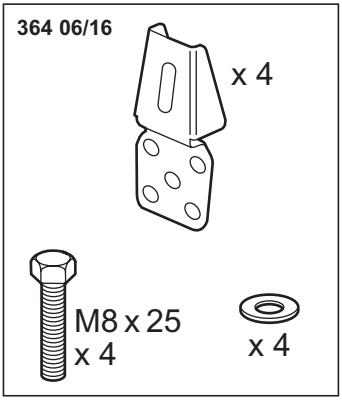


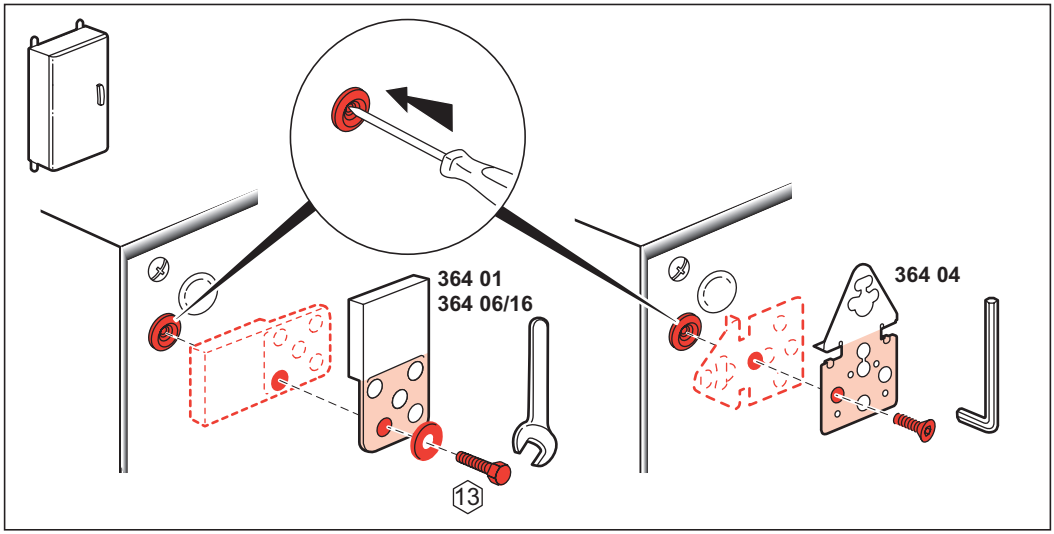


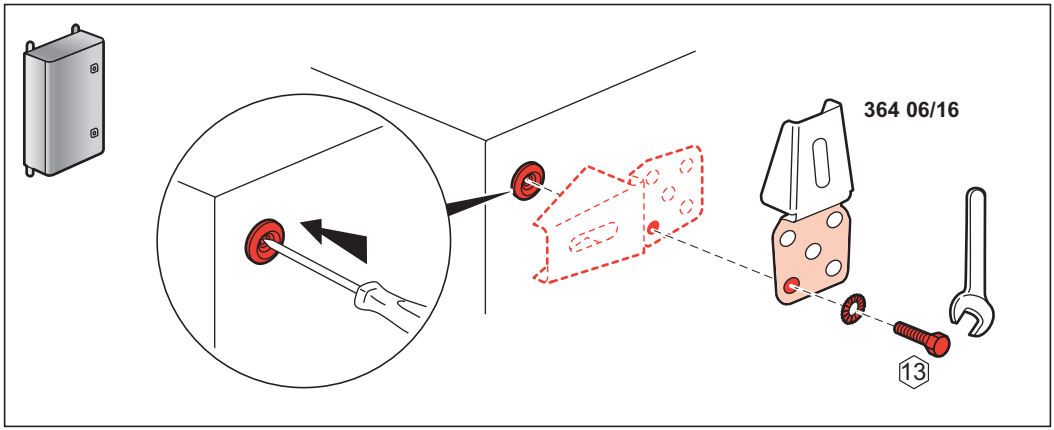


N041282/04