Vistop 32 A
227 34

legrand®

1

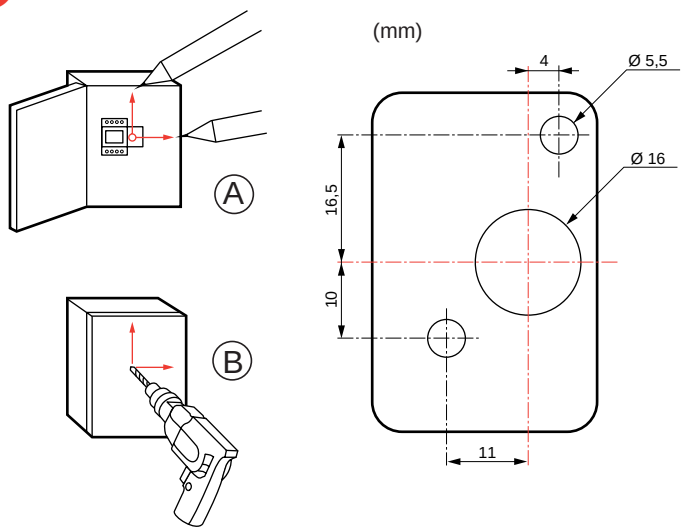

2

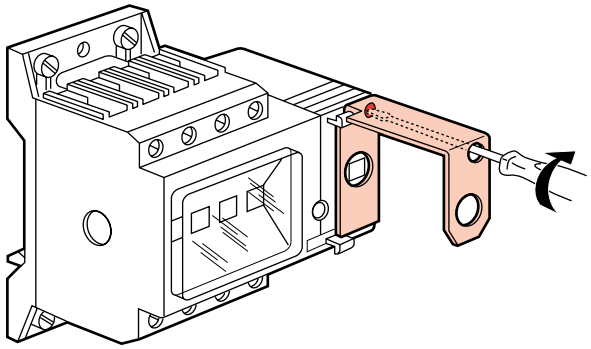

3

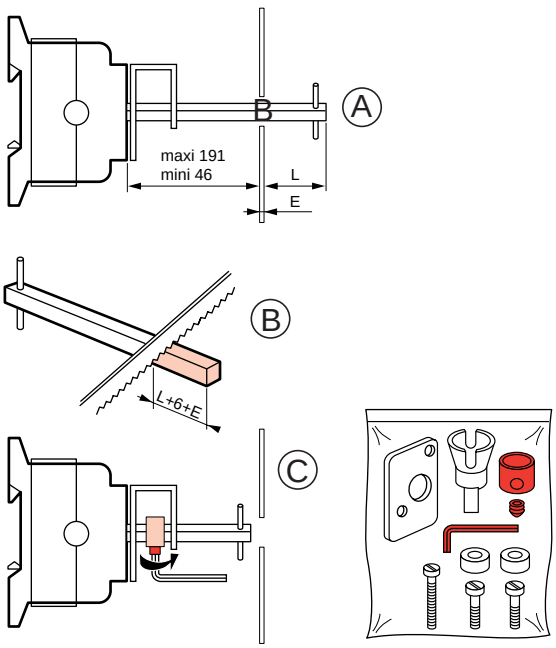

4

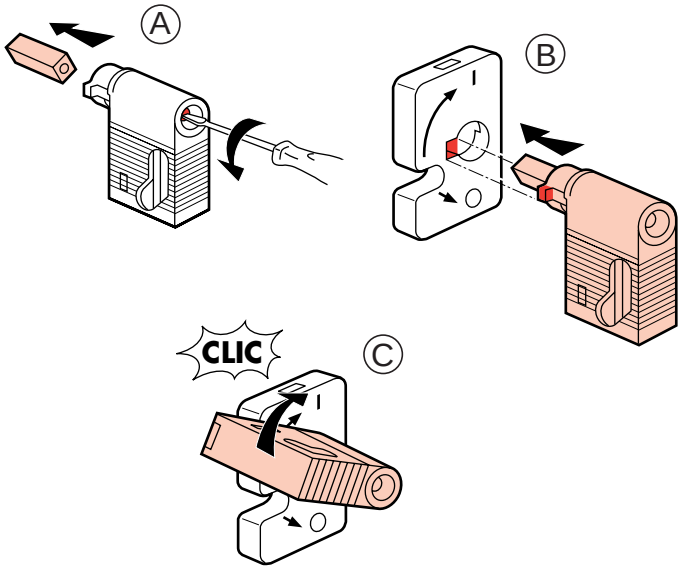

5

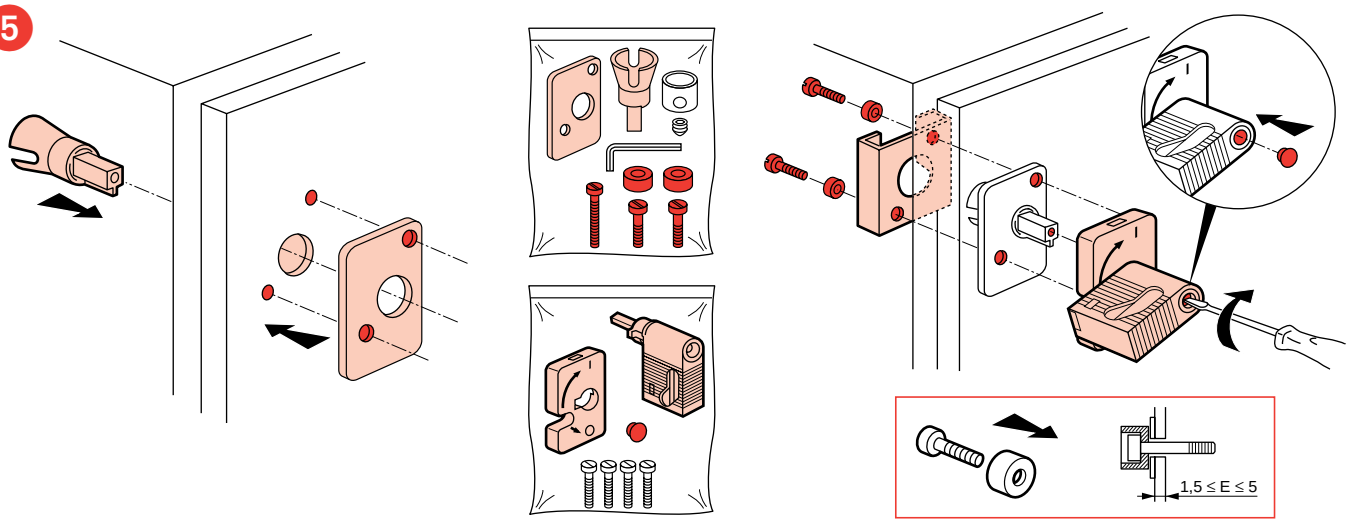

N0064304/07