128, av. du Maréchal-de-Lattre-de-Tassigny - 87045 LIMOGES Cedex
Tel: +33(0)5 55 06 87 87 Fax: +33(0)5 55 06 88 88
www.legrand.com

Motion SENSOR MW 360°

Cat. No(s): 0 487 38

CONTENTS ..... PAGE

1. Use 1
2. Technical features 1
3. Overall dimensions 1
4. Connection 2
5. Installation 2
6. Setting 2
6.1 Setting the detection range (sensitivity) 2
6.2 Setting time (switch-off delay) 2
6.3 Twilight setting (light sensitivity) 2
7. Performance 2
8. Standards 2

1. USE

This device enables a light source to be controlled automatically by detecting presence in the monitoring area.

Using Microwave technology, this motion sensor has a 360° detection angle and, when positioned 3 m above the ground, 16 m diameter detection area.

Quick and easy to set, using potentiometers.

The light level threshold can vary from 3 to ☼ and the time delay from 10 seconds to 12 minutes.

Mounting: Flush-mounted.

Indoor.

2. TECHNICAL FEATURES

- Voltage: 220 - 240 V∿
- Voltage type: AC
- Frequency: 50/60 Hz
- Wiring: 2 x 1.5 mm²
- Type of terminal: screw
- Cable nature for connection: Flexible
- Built-in diameter: 62 mm

	①		②		③	
230 V∿	1200 W	5.2 A	300 W	1.3 A	300 W	1.3 A

1 - Halogen lamp
2 - Compact fluorescent lamp with integrated electronic ballast
3 - LED lamp

2. TECHNICAL FEATURES (continued)

- Penetration by solid and liquid matter: IP20
- Protection class: IK 02
- Operating / setting temperature: -20°C to +40°C
- Storage temperature: -5°C to +45°C
- Material quality: Thermoplastic
- Surface finishing: Glossy
- Colour: White

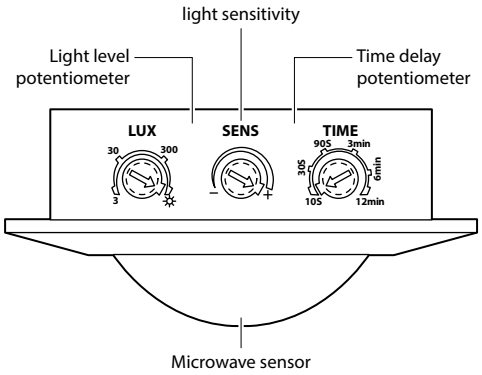

3. OVERALL DIMENSIONS

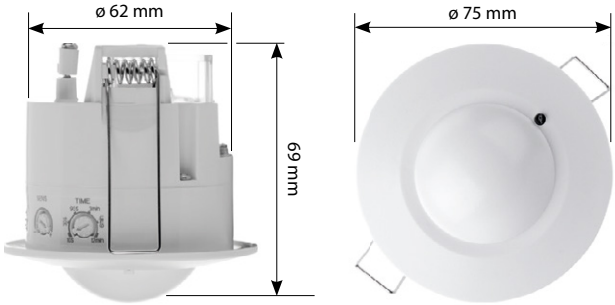

4. CONNECTION

Wiring: 2 x 1.5 mm²
Type of terminal: screw

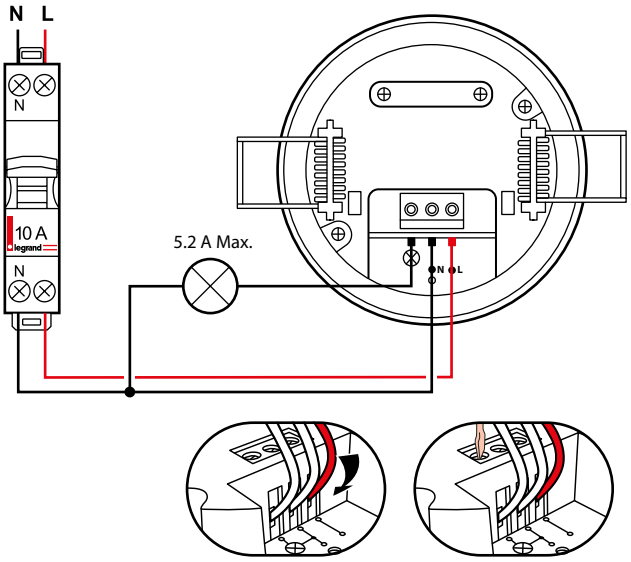

5. INSTALLATION

Installation and connection:

Install the sensor in a suitable place where its performance will not be affected by direct hot air flow (e.g. from a heater), direct sunshine or other disturbing factors.

1. Select a suitable location, preferably across themonitored area, up to 3 m in height.
2. Switch off the main power supply, connect thewires according to the diagram and then connectthe sensor to the junction box.
3. Use the switch to set the desired parameters of the sensor.

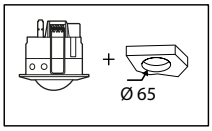

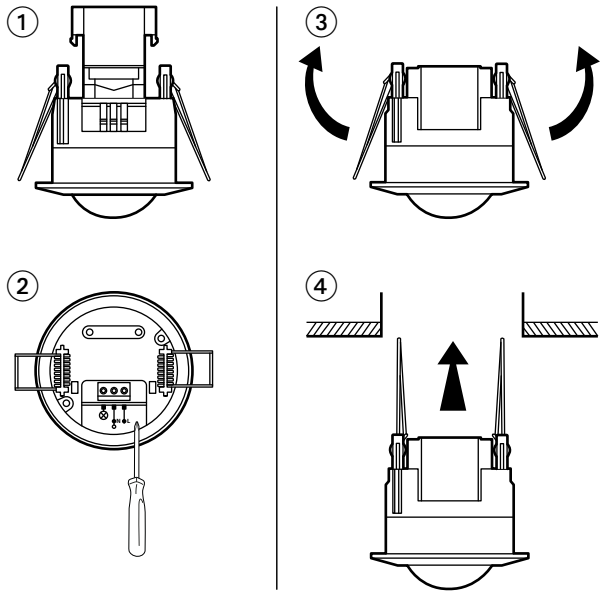

6. SETTING

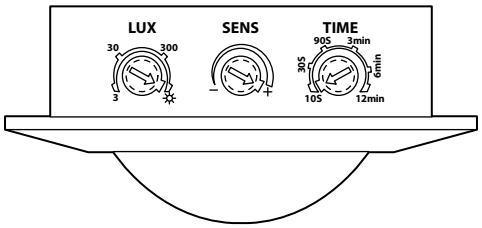

■ 6.1 Setting the detection range (sensitivity)

The "detection range" means an approximate circular diameter on the ground which, if installing the sensor at a height of 2.5 m, will result in the detection zone.

■ 6.2 Setting time (switch-off delay)

The desired operating time (lighting) of a light can be continuously adjusted within the range of 10 seconds +/- 3 seconds to 12 minutes +/- 60 seconds. Every motion during this period will trigger a new cycle. When adjusting the detection zone and testing the function, it is recommended to set the shortest time.

■ 6.3 Twilight setting (light sensitivity)

You can adjust the desired light sensitivity continuously within the range of approx. 3 to ☼.

7. PERFORMANCE

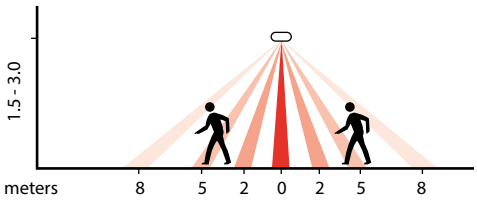

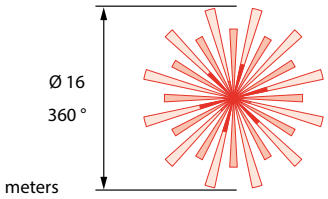

8. STANDARDS

- Directive: CE
- Installation standards: NFC 15-100
- Product standards: IEC 60669-2-1
- Environmental standards:
  - European Directive 2002/96/EC:
    WEEE (WasteElectrical and Electronic Equipment).
  - European Directive 2002/95/EC:
    RoHS (Restriction ofHazardous Substances).

- ETSI EN 300 440 V2.2.1
- ETSI EN 301 489 -1 V2.2.3
- ETSI EN 301 489-3 V2.1.1

- **LEGRAND** declares that radio equipment of the type Cat. no. **0 487 38** complies with Directive **2014/53/EU**.
  The full text of the EU declaration of conformity can be found at:
  www.legrand.com/ecatalogue